DIAGNOSTIC INFORMATION AND PROCEDURES

PASSENGER CAR ZONING

All grounds, in-line connectors, pass-through grommets, and splices have identifying numbers that correspond to where they are located in the vehicle. The following table explains the numbering system.

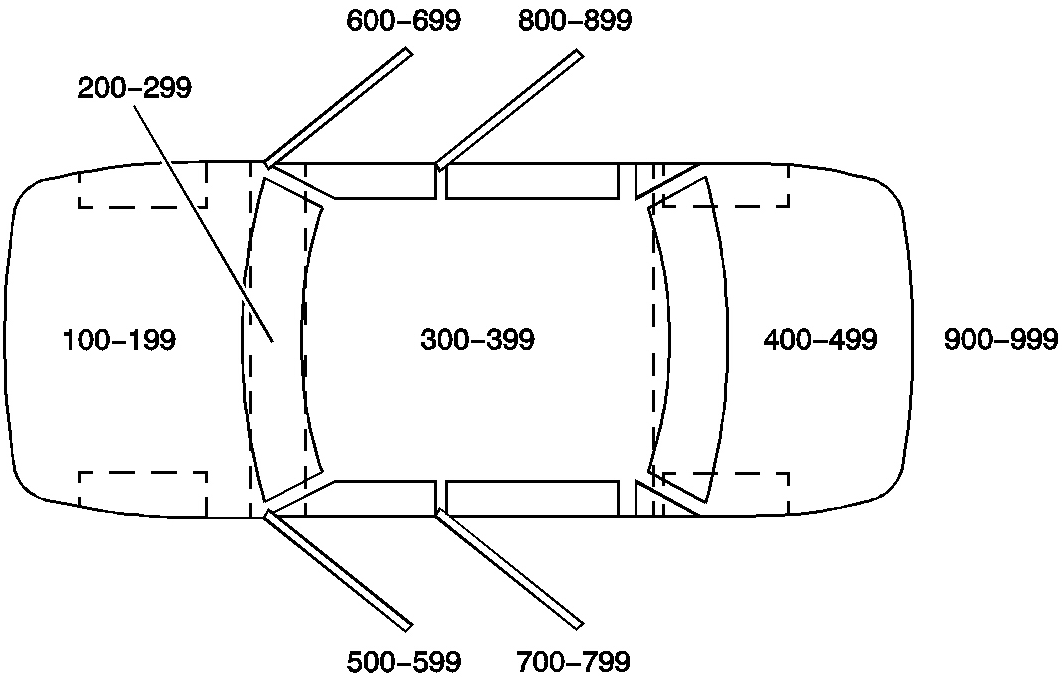

Fig. 1: Passenger Car Zoning Component View
Courtesy of GENERAL MOTORS CORP.

Vehicle Zoning Table

Callout Numbers	Zone Description
100-199	Engine compartment- All forward of the dash panel Note: 001-099 are additional for the engine compartment - ONLY to be used if all 100-199 items are used
200-299	Within the instrument panel area
300-399	Passenger compartment - From the instrument panel to the rear wheelhouse
400-499	Luggage compartment - From the rear wheelhouse to the rear of the vehicle

500-599	Within the left front door
600-699	Within the right front door
700-799	Within the left rear door
800-899	Within the right rear door
900-999	Within the luggage compartment lid or hatch

ELECTRICAL SYMBOLS

Electrical Symbols

Symbol	Description
	Supplemental Inflatable Restraint (SIR) or Supplemental Restraint System (SRS) Icon This icon is used to alert the technician that the system contains SIR/SRS components that require certain precautions before servicing.
	On-Board Diagnostic (OBD II) Icon This icon is used to alert the technician that the circuit is essential for proper OBD II emission controls circuit operation. Any circuit which, if it fails, causes the malfunction indicator lamp (MIL) to turn on, is identified as an OBD II circuit.
	Important Icon This icon is used to alert the technician that there is additional information

	that will aid in servicing a system.
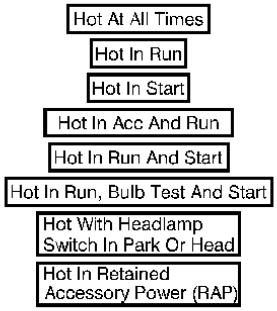	Voltage Indicator Boxes These boxes are used on schematics to indicate when voltage is present at a fuse.
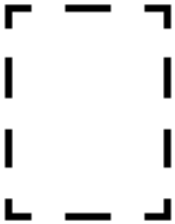	Partial Component When a component is represented in a dashed box, the component or its wiring is not shown in its entirety.

	Entire Component When a component is represented in a solid box the component or its wiring is shown in its entirety.
	Fuse

	Circuit Breaker
	Fusible Link

Connector Attached to Component

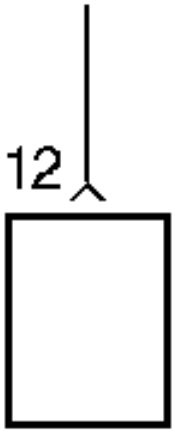	
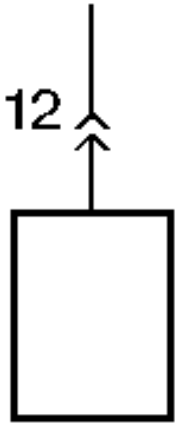	Pigtail Connector

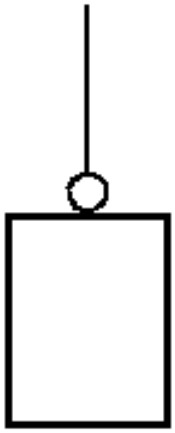	Bolt On or Screw On Eyelet Terminal
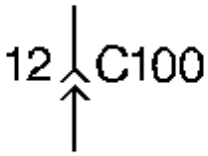	Inline Harness Connector
	Splice

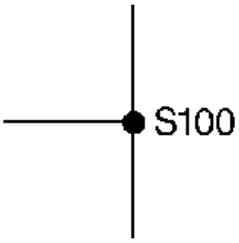	
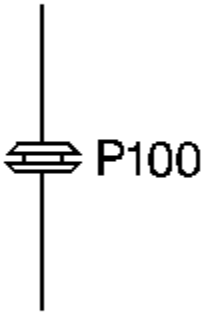	Pass Through the Grommet
	Chassis Ground

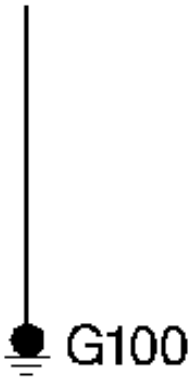	
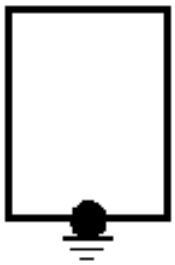	Case Ground
	Single Filament Light Bulbs

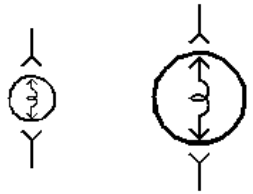	
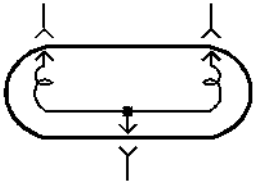	Double Filament Light Bulb
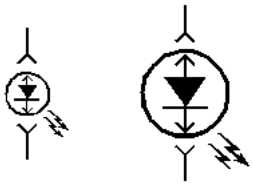	Light Emitting Diodes
	Capacitor

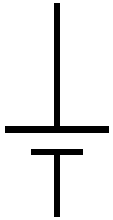	
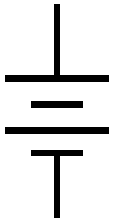	Battery

	Variable Battery
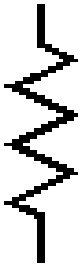	Resistor

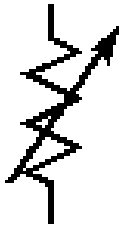	Variable Resistor
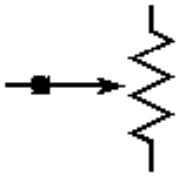	Position Sensor
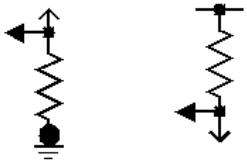	I/O Resistors

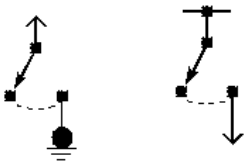	I/O Switches
	Diode
	Crystal

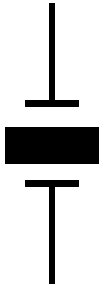	
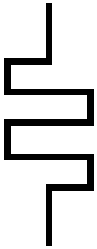	Heating Elements

	Motor
	Solenoid

	Coil
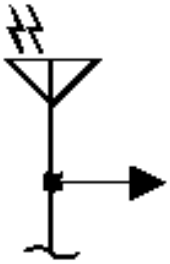	Antenna

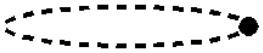	Shield
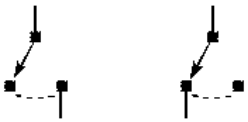	Switches
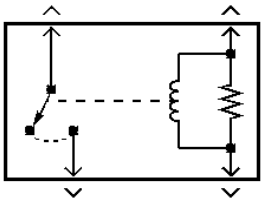	Single Pole Single Throw Relay
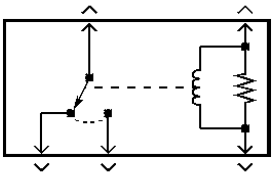	Single Pole Double Throw Relay

GENERAL ELECTRICAL DIAGNOSIS PROCEDURES

Basic Knowledge Required

Without a basic knowledge of electricity, it will be difficult to use the diagnostic procedures contained in the service manual. You should understand the basic theory of electricity, and know the meaning of voltage (volts), current (amps), and resistance (ohms). You should also be able to read and understand a wiring diagram, as well as understand what happens in a circuit with an open or a shorted wire.

CHECKING AFTERMARKET ACCESSORIES

Do not connect aftermarket accessories into the following circuits:

CAUTION: Refer to SIR Caution in Cautions and Notices.

- SIR circuits, all such circuits are indicated on circuit diagrams with the SIR symbol.

NOTE: Refer to OBD II Symbol Description Notice in Cautions and Notices.

- OBD II circuits, all such circuits are indicated on circuit diagrams with the OBD II symbol.

Always check for aftermarket accessories (non-OEM) as the first step in diagnosing electrical problems. If the vehicle is so equipped, disconnect the system to verify that these add-on accessories are not the cause of the problems.

Possible causes of vehicle problems related to aftermarket accessories include:

- Power feeds connected to points other than the battery
- Antenna location
- Transceiver wiring located too close to vehicle electronic modules or wiring
- Poor shielding or poor connectors on antenna feed line
- Check for recent service bulletins detailing installation guidelines for aftermarket accessories.

CIRCUIT TESTING

The Circuit Testing section contains the following diagnostic testing information. Using this information along with the diagnostic procedures will identify the cause of the electrical malfunction.

- **Using Connector Test Adapters**
- **Probing Electrical Connectors**
- **Troubleshooting with a Digital Multimeter**
- **Troubleshooting with a Test Lamp**
- **Using Fused Jumper Wires**
- **Measuring Voltage**
- **Measuring Voltage Drop**
- **Measuring Frequency**
- **Testing for Continuity**
- **Testing for Short to Ground**
- **Testing for a Short to Voltage**

USING CONNECTOR TEST ADAPTERS

NOTE: **Do not insert test equipment probes (DVOM etc.) into any connector or fuse block terminal. The diameter of the test probes will deform most terminals. A deformed terminal will cause a poor connection, which will result in a system failure. Always use the J-35616 GM-Approved Terminal Test Kit or the J 42675 Flat-Wire Probe Adapter in order to front probe terminals. Do not use paper clips or other substitutes to probe terminals.**

When using the J-35616 GM-Approved Terminal Test Kit, ensure the terminal test adapter choice is the correct size for the connector terminal. Do not visually choose the terminal test adapter because some connector terminal cavities may appear larger than the actual terminal in the cavity. Using a larger terminal test adapter will damage the terminal. Refer to the J-35616 GM-Approved Terminal Test Kit label on the inside of the J-35616 GM-Approved Terminal Test Kit for the correct adapter along with the connector end view for terminal size.

PROBING ELECTRICAL CONNECTORS

IMPORTANT: **Always be sure to reinstall the connector position assurance (CPA) and terminal position assurance (TPA) when reconnecting connectors or replacing terminals.**

Frontprobe

Disconnect the connector and probe the terminals from the mating side (front) of the connector.

NOTE: **Do not insert test equipment probes (DVOM etc.) into any connector or fuse block terminal. The diameter of the test probes will deform most terminals. A deformed terminal will cause a poor connection, which will result in a system failure. Always use the J-35616 GM-Approved Terminal Test Kit or the J 42675 Flat-Wire Probe Adapter in order to front probe terminals. Do not use paper clips or other substitutes to probe terminals.**

When using the J-35616 GM-Approved Terminal Test Kit, ensure the terminal test adapter choice is the correct size for the connector terminal. Do not visually choose the terminal test adapter because some connector terminal cavities may appear larger than the actual terminal in the cavity. Using a larger terminal test adapter will damage the terminal. Refer to the J-35616 GM-Approved Terminal Test Kit label on the inside of the J-35616 GM-Approved Terminal Test Kit for the correct adapter along with the connector end view for terminal size.

Refer to the following table as a guide in selecting the correct test adapter for frontprobing connectors:

Probing Electrical Connectors

Test Adapter	Description

J-35616-64	Male .64 Series Connector (lt blue)
J-35616-65	Female .64 Series Connector (lt blue)
J-35616-6	Male Flex MICRO-PACK Series Connector (brown)
J-35616-7	Female Flex MICRO-PACK Series Connector (brown)
J-35616-2A	Male Flex 150 Series Connector (gray)
J-35616-3	Female Flex 150 Series Connector (gray)
J-35616-4A	Male Spade 280 Series Connector (purple)
J-35616-5	Female Spade 280 Series Connector (purple)
J-35616-40	Male Flex 480 Series Connector (dk blue)
J-35616-41	Female Flex 480 Series Connector (dk blue)
J-35616-42	Male Flex 630 Series Connector (red)
J-35616-43	Female Flex 630 Series Connector (red)
J-35616-44	Male 800 Series Connector (yellow)
J-35616-45	Female 800 Series Connector (yellow)
J-35616-8	Male Weather Pack Connector (orange)
J-35616-9	Female Weather Pack Connector (orange)

Backprobe

IMPORTANT:

- **Backprobe connector terminals only when specifically required in diagnostic procedures.**
- **Do not backprobe a sealed (Weather Pack(R)) connector, less than a 280 series Metri-Pack connector, a Micro-Pack connector, or a flat wire (dock and lock) connector.**
- **Backprobing can be a source of damage to connector terminals. Use care in order to avoid deforming the terminal, either by forcing the test probe too far into the cavity or by using too large of a test probe.**
- **After backprobing any connector, inspect for terminal damage. If terminal damage is suspected, test for proper terminal contact.**

Do not disconnect the connector and probe the terminals from the harness side (back) of the connector.

TROUBLESHOOTING WITH A DIGITAL MULTIMETER

NOTE: **Refer to Test Probe Notice in Cautions and Notices.**

IMPORTANT: **Circuits which include any solid state control modules, such as the PCM, should only be tested with a 10 megohm or higher impedance digital multimeter such as the J 39200 .**

The **J 39200** instruction manual is a good source of information and should be read thoroughly upon receipt of the DMM as well as kept on hand for future reference.

A DMM should be used instead of a test lamp in order to test for voltage in high impedance circuits. While a test lamp shows whether voltage is present, a DMM indicates how much voltage is present.

The ohmmeter function on a DMM shows how much resistance exists between 2 points along a circuit. Low resistance in a circuit means good continuity.

IMPORTANT: Disconnect the power feed from the suspect circuit when measuring resistance with a DMM. This prevents incorrect readings. DMMs apply such a small voltage to measure resistance that the presence of voltages can upset a resistance reading.

Diodes and solid state components in a circuit can cause a DMM to display a false reading. To find out if a component is affecting a measurement take a reading once, then reverse the leads and take a second reading. If the readings differ the solid state component is affecting the measurement.

Following are examples of the various methods of connecting the DMM to the circuit to be tested:

- Backprobe both ends of the connector and either hold the leads in place while manipulating the connector or tape the leads to the harness for continuous monitoring while you perform other operations or test driving. Refer to **Probing Electrical Connectors** .
- Disconnect the harness at both ends of the suspected circuit where it connects either to a component or to other harnesses.
- If the system that is being diagnosed has a specified pinout or breakout box, it may be used in order to simplify connecting the DMM to the circuit or for testing multiple circuits quickly.

TROUBLESHOOTING WITH A TEST LAMP

Tools Required

J 35616-200 12-Volt Unpowered Test Lamp

NOTE: Refer to Test Probe Notice in Cautions and Notices.

A test lamp can simply and quickly test a low impedance circuit for voltage.

The **J 35616-200** is Micro-Pack compatible and comprised of a 12-volt light bulb with an attached pair of leads.

To properly operate this tool use the following procedures.

When testing for voltage:

1. Attach 1 lead to ground.
2. Touch the other lead to various points along the circuit where voltage should be present.
3. When the bulb illuminates, there is voltage at the point being tested.

When testing for ground:

1. Attach 1 lead to battery positive voltage.
2. Touch the other lead to various points along the circuit where ground should be present.
3. When the bulb illuminates, there is ground at the point being tested.

USING FUSED JUMPER WIRES

Tools Required

J 36169-A Fused Jumper Wire. See **Special Tools and Equipment** .

IMPORTANT: A fused jumper may not protect solid state components from being damaged.

The **J 36169-A** includes small clamp connectors that provide adaptation to most connectors without damage. See **Special Tools and Equipment** . This fused jumper wire is supplied with a 20-A fuse which may not be suitable for some circuits. Do not use a fuse with a higher rating than the fuse that protects the circuit being tested.

MEASURING VOLTAGE

NOTE: Refer to Test Probe Notice in Cautions and Notices.

The following procedure measures the voltage at a selected point in a circuit.

1. Disconnect the electrical harness connector for the circuit being tested, if necessary.
2. Enable the circuit and/or system being tested. Use the following methods:
   - Turn ON the ignition, with the engine OFF.
   - Turn ON the engine.
   - Turn ON the circuit and/or system with a scan tool in Output Controls.
   - Turn ON the switch for the circuit and/or system being tested.
3. Select the V (AC) or V (DC) position on the DMM.
4. Connect the positive lead of the DMM to the point of the circuit to be tested.
5. Connect the negative lead of the DMM to a good ground.
6. The DMM displays the voltage measured at that point.

MEASURING VOLTAGE DROP

NOTE: Refer to Test Probe Notice in Cautions and Notices.

The following procedure determines the difference in voltage potential between 2 points.

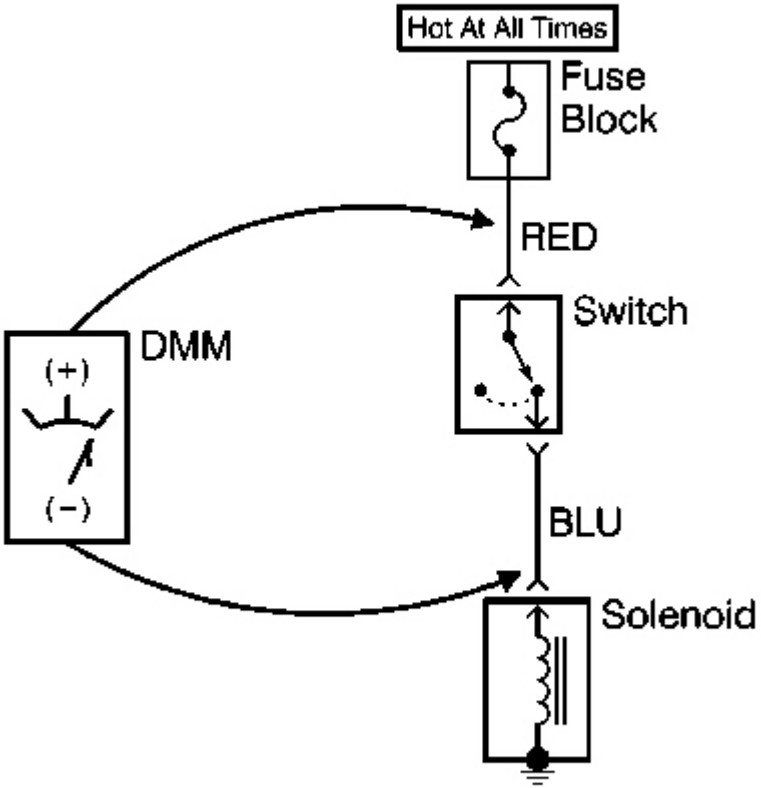

Fig. 2: Measuring Voltage Drop Terminal Identification
Courtesy of GENERAL MOTORS CORP.

1. Set the rotary dial of the DMM to the V (DC) position.
2. Connect the positive lead of the DMM to 1 point of the circuit to be tested.
3. Connect the negative lead of the DMM to the other point of the circuit.
4. Operate the circuit.
5. The DMM displays the difference in voltage between the 2 points.

MEASURING FREQUENCY

NOTE: Refer to Test Probe Notice in Cautions and Notices.

The following procedure determines the frequency of a signal.

IMPORTANT: Connecting the DMM to the circuit before pressing the Hz button will allow the DMM to autorange to an appropriate range.

1. Apply power to the circuit.
2. Set the rotary dial of the DMM to the V (AC) position.
3. Connect the positive lead of the DMM to the circuit to be tested.
4. Connect the negative lead of the DMM to a good ground.
5. Press the Hz button on the DMM.
6. The DMM will display the frequency measured.

TESTING FOR CONTINUITY

NOTE: Refer to Test Probe Notice in Cautions and Notices.

The following procedures verify good continuity in a circuit.

With a DMM

1. Set the rotary dial of the DMM to the ohm position.
2. Disconnect the power feed (i.e. fuse, control module) from the suspect circuit.
3. Disconnect the load.
4. Press the MIN MAX button on the DMM.
5. Connect one lead of the DMM to one end of the circuit to be tested.
6. Connect the other lead of the DMM to the other end of the circuit.
7. If the DMM displays low or no resistance and a tone is heard, the circuit has good continuity.

With a Test Lamp

IMPORTANT: Only use the test lamp procedure on low impedance power and ground circuits.

1. Remove the power feed (i.e. fuse, control module) from the suspect circuit.
2. Disconnect the load.
3. Connect 1 lead of the test lamp to 1 end of the circuit to be tested.
4. Connect the other lead of the test lamp to battery positive voltage.
5. Connect the other end of the circuit to ground.
6. If the test lamp illuminates (full intensity), then the circuit has good continuity.

TESTING FOR SHORT TO GROUND

NOTE: Refer to Test Probe Notice in Cautions and Notices.

The following procedures test for a short to ground in a circuit.

With a DMM

1. Remove the power feed (i.e. fuse, control module) from the suspect circuit.
2. Disconnect the load.
3. Set the rotary dial of the DMM to the ohm position.
4. Connect 1 lead of the DMM to 1 end of the circuit to be tested.
5. Connect the other lead of the DMM to a good ground.
6. If the DMM does NOT display infinite resistance (OL), there is a short to ground in the circuit.

With a Test Lamp

1. Remove the power feed (i.e. fuse, control module) from the suspect circuit.
2. Disconnect the load.
3. Connect 1 lead of the test lamp to battery positive voltage.
4. Connect the other lead of the test lamp to 1 end of the circuit to be tested.
5. If the test lamp illuminates, there is a short to ground in the circuit.

Fuse Powering Several Loads

1. Review the system schematic and locate the fuse that is open.
2. Open the first connector or switch leading from the fuse to each load.
3. Connect a DMM across the fuse terminals (be sure that the fuse is powered).
    - When the DMM displays voltage the short is in the wiring leading to the first connector or switch.
    - If the DMM does not display voltage refer to the next step.
4. Close each connector or switch until the DMM displays voltage in order to find which circuit is shorted.

TESTING FOR A SHORT TO VOLTAGE

NOTE: Refer to Test Probe Notice in Cautions and Notices.

The following procedure tests for a short to voltage in a circuit.

1. Set the rotary dial of the DMM to the V (DC) position.
2. Connect the positive lead of the DMM to 1 end of the circuit to be tested.
3. Connect the negative lead of the DMM to a good ground.
4. Turn ON the ignition and operate all accessories.
5. If the voltage measured is greater than 1 volt, there is a short to voltage in the circuit.

TESTING FOR INTERMITTENT CONDITIONS AND POOR CONNECTIONS

Tools Required

- J 35616 GM-Approved Terminal Test Kit
- **J-38125** Terminal Repair Kit. See **Special Tools and Equipment** .
- **J 42675** Flat-Wire Probe Adapter. See **Special Tools and Equipment** .

Most intermittent conditions are caused by faulty electrical connections or wiring. Inspect for the following items:

- Wiring broken inside the insulation
- Poor connection between the male and female terminal at a connector.
- Poor terminal to wire connection-Some conditions which fall under this description are poor crimps, poor solder joints, crimping over the wire insulation rather than the wire itself and corrosion in the wire to terminal contact area, etc.
- Wire insulation which is rubbed through-This causes an intermittent short as the bare area touches other wiring or parts of the vehicle.
- Refer to **Inducing Intermittent Fault Conditions** in order to duplicate the conditions required in order to verify the complaint.
- Refer to **Testing for Electrical Intermittents** for test procedures to detect intermittent open, high resistance, short to ground, and short to voltage conditions.
- Refer to **Scan Tool Snapshot Procedure** for advanced intermittent diagnosis.

Testing for Proper Terminal Contact

It is important to test terminal contact at the component and any inline connectors before replacing a suspect component. Mating terminals must be inspected to ensure good terminal contact. A poor connection between the male and female terminal at a connector may be the result of contamination or deformation.

Contamination may be caused by the connector halves being improperly connected. A missing or damaged connector seal, damage to the connector itself, or exposing the terminals to moisture and dirt can also cause contamination. Contamination, usually in the underhood or underbody connectors, leads to terminal corrosion, causing an open circuit or intermittently open circuit.

Deformation is caused by probing the mating side of a connector terminal without the proper adapter. Always use the **J 35616** when probing connectors. Other causes of terminal deformation are improperly joining the connector halves, or repeatedly separating and joining the connector halves. Deformation, usually to the female terminal contact tang, can result in poor terminal contact causing an open or intermittently open circuit.

Round Wire Connectors

Follow the procedure below to test terminal contact of Metri-Pack or 56 series terminals. Refer to the **J-38125** or the J 38125-4 Instruction Manual for terminal identification. See **Special Tools and Equipment** .

Follow the procedure below in order to test terminal contact.

1. Separate the connector halves.
2. Visually inspect the connector halves for contamination. Contamination may result in a white or green build-up within the connector body or between terminals. This causes high terminal resistance, intermittent contact, or an open circuit. An underhood or underbody connector that shows signs of contamination should be replaced in its entirety: terminals, seals, and connector body.
3. Using an equivalent male terminal from the **J-38125** , test that the retention force is significantly different between a good terminal and a suspect terminal. See **Special Tools and Equipment** . Replace the female terminal in question.

Flat Wire (Dock and Lock) Connectors

-

There are no serviceable parts for flat wire (dock and lock) connectors on the harness side or the component side.

Follow the procedure below in order to test terminal contact.

1. Remove the component in question.
2. Visually inspect each side of the connector for signs of contamination. Avoid touching either side of the connector as oil from your skin may be a source of contamination as well.
3. Visually inspect the terminal bearing surfaces of the flat wire circuits for splits, cracks, or other imperfections that could cause poor terminal contact. Visually inspect the component side connector to ensure that all of the terminals are uniform and free of damage or deformation.
4. Insert the appropriate adapter from the **J 42675** on the flat wire harness connector in order to test the circuit in question. See **Special Tools and Equipment** .

INDUCING INTERMITTENT FAULT CONDITIONS

In order to duplicate the customer's concern, it may be necessary to manipulate the wiring harness if the malfunction appears to be vibration related. Manipulation of a circuit can consist of a wide variety of actions, including:

- Wiggling the harness
- Disconnecting a connector and reconnecting
- Stressing the mechanical connection of a connector
- Pulling on the harness or wire in order to identify a separation/break inside the insulation
- Relocating a harness or wires

All these actions should be performed with some goal in mind. For instance, with a scan tool connected, wiggling the wires may uncover a faulty input to the control module. The snapshot option would be appropriate here. Refer to **Scan Tool Snapshot Procedure** . You may need to load the vehicle in order to duplicate the concern. This may require the use of weights, floorjacks, jackstands, frame machines, etc. In these cases you are attempting to duplicate the concern by manipulating the suspension or frame. This method is useful in finding

harnesses that are too short and their connectors pull apart enough to cause a poor connection. A DMM set to Peak Min/Max mode and connected to the suspect circuit while testing can yield desirable results. Refer to **Testing for Electrical Intermittents** .

Certainly, using the senses of sight, smell, and hearing while manipulating the circuit can provide good results as well.

There may be instances where circuit manipulation alone will not meet the required criteria for the fault condition to appear. In such cases it may be necessary to expose the suspect circuit to other conditions while manipulating the harness. Such conditions would include high moisture conditions, along with exceptionally high or low temperatures. The following discusses how to expose the circuit to these kinds of conditions.

Salt Water Spray

Some compounds possess the ability to conduct electricity when dissolved in water such as ordinary salt. By mixing table salt with water in sufficient quantities, you can enhance the conductive properties of water so that any circuit which may be sensitive to moisture will more readily fail when liberally sprayed with this mixture.

Mixing 0.35L (12 oz) of water with approximately 1 tablespoon of salt will yield a salt solution of 5 percent. Fill a normal spray bottle with this mixture. This mixture is sufficient to enhance the water's own conductivity. This may cause the circuit to fail more easily when sprayed. Once the mixture is completed, spray the suspect area liberally with the solution. Then, while monitoring either a scan tool or DMM, manipulate the harness as discussed previously.

High Temperature Conditions

Tools Required

J 25070 Heat Gun

If the complaint tends to be heat related, you can simulate the condition using the **J 25070** .

Using the heat gun, you can heat up the suspected area or component. Manipulate the harnesses under high temperature conditions while monitoring the scan tool or DMM to locate the fault condition.

The high temperature condition may be achieved simply by test driving the vehicle at normal operating temperature. If a heat gun is unavailable, consider this option to enhance your diagnosis. This option does not allow for the same control, however.

Low Temperature Conditions

Depending on the nature of the fault condition, placing a fan in front of the vehicle while the vehicle is in the shade can have the desired effect.

If this is unsuccessful, use local cooling treatments such as ice or a venturi type nozzle (one that provides hot or cold air). This type of tool is capable of producing air stream temperatures down to -18°C (0°F) from one end and 71°C (160°F) from the other. This is ideally suited for localized cooling needs.

Once the vehicle, component, or harness has been sufficiently cooled, manipulate the harness or components in an effort to duplicate the concern.

TESTING FOR ELECTRICAL INTERMITTENTS

Perform the following procedures while wiggling the harness from side to side. Continue this at convenient points (about 6 inches apart) while watching the test equipment.

- **Testing for Short to Ground**
- **Testing for Continuity**
- **Testing for a Short to Voltage**

If the fault is not identified, perform the procedure below using the MIN MAX feature on the **J 39200** DMM. This feature allows you to manipulate the circuit without having to watch the **J 39200** . The **J 39200** will generate an audible tone when a change is detected.

IMPORTANT: The J 39200 must be used in order to perform the following procedure since the J 39200 can monitor current, resistance or voltage while recording the minimum (MIN), and maximum (MAX) values measured.

1. Connect the **J 39200** to both sides of a suspected connector (still connected), or from one end of a suspected circuit to the other. Refer to **Troubleshooting with a Digital Multimeter** for information on connecting the **J 39200** to the circuit.
2. Set the rotary dial of the **J 39200** to the V (AC) or V (DC) position.
3. Press the range button of the **J 39200** in order to select the desired voltage range.
4. Press the MIN MAX button of the **J 39200** . The **J 39200** displays 100 ms RECORD and emits an audible tone (beep).

IMPORTANT: The 100 ms RECORD mode is the length of time an input must stay at a new value in order to record the full change.

5. Simulate the condition that is potentially causing the intermittent connection, either by wiggling the connections or the wiring, test driving, or performing other operations. Refer to **Inducing Intermittent Fault Conditions** .
6. Listen for the audible Min Max Alert which indicates that a new minimum or maximum value has been recorded.
7. Press the MIN MAX button once in order to display the MAX value and note the value.
8. Press the MIN MAX button again in order to display the MIN value and note the value.
9. Determine the difference between the MIN and MAX values.
    - If the variation between the recorded MIN and MAX voltage values is 1 volt or greater an intermittent open or high resistance condition exists. Repair the condition as necessary.
    - If the variation between the recorded MIN and MAX voltage values is less than 1 volt an intermittent open or high resistance condition does not exist.

SCAN TOOL SNAPSHOT PROCEDURE

Snapshot is a recording of what a control module on the vehicle was receiving for information while the snapshot is being made. A snapshot may be used to analyze the data during the time a vehicle condition is current. This allows you to concentrate on making the condition occur, rather than trying to view all the data in anticipation of the fault. The snapshot contains information around a trigger point that you have determined. Only a single data list may be recorded in each snapshot. The **Scan Tool** has the ability to store 2 snapshots. The ability to record 2 snapshots allows comparing hot versus cold and good versus bad vehicle scenarios. The snapshots are stored on a first-in, first-out basis. If a third snapshot is taken, the first snapshot stored in the memory will be lost.

Snapshots can be 1 of 2 types:

- Snapshot - taken from the Snapshot menu choice
- Quick Snapshot - taken from the Data Display soft key choice, does not contain DTC information

When a snapshot is taken, it is recorded on the memory card and may contain as many as 1200 frames of information. Because the snapshot is recorded onto the memory card, snapshots are not lost if the **Scan Tool** is powered down.

The snapshot replay screen has a plot soft key that can be of great value for intermittent diagnosis. The snapshot plot feature can help you to quickly determine if a sensor is outside of its expected values by plotting 3 parameters at a time. The data will be displayed both graphically and numerically showing the minimum and maximum values for all frames captured. This is helpful, especially if the fault occurs only once and does not set a DTC.

CIRCUIT PROTECTION - FUSES

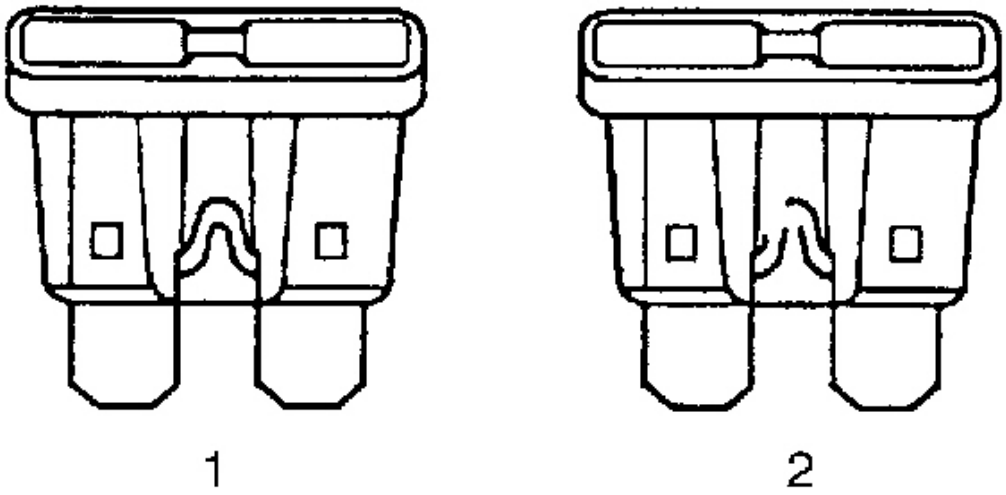

Fig. 3: View Of Good Fuse & Open Terminal Identification (Melted) Fuse
Courtesy of GENERAL MOTORS CORP.

The fuse is the most common method of an automotive wiring circuit protection. Whenever there is an excessive amount of current flowing through a circuit the fusible element will melt and create an open or incomplete circuit. Fuses are an one time protection device and must be replaced each time the circuit is overloaded. To determine if a fuse is open, remove the suspected fuse and examine the element in the fuse for an open (2). If not broken (1), also check for continuity using a DMM or a continuity tester. If the element is open or continuity is suspect, replace the fuse with one of equal current rating.

Fuse Types

Current Rating Amperes	Color
Auto Fuses, Mini Fuses	
2	Gray
3	Violet
5	Tan
7.5	Brown
10	Red
15	Blue
20	Yellow
25	White or Natural
30	Green
Maxi Fuses	
20	Yellow

30	Light Green
40	Orange or Amber
60	Blue
50	Red

CIRCUIT PROTECTION - CIRCUIT BREAKERS

A circuit breaker is a protective device that is designed to open the circuit when a current load is in excess of the rated breaker capacity. If there is a short or other type of overload condition in the circuit, the excessive current will open the circuit between the circuit breaker terminals. Two types of circuit breakers are used.

Circuit Breaker

This type opens when excessive current passes through it for a period of time. It closes again after a few seconds, and if the cause of the high current is still present, it will open again. The circuit breaker will continue to cycle open and closed until the condition causing the high current is removed.

Positive Temperature Coefficient (PTC) Circuit Breaker

This type greatly increases its resistance when excessive current passes through it. The excessive current heats the PTC device, as the device heats its resistance increases. Eventually the resistance gets so high that the circuit is effectively open. Unlike the ordinary circuit breaker the PTC unit will not reset until the circuit is opened, by removing the voltage from its terminals. Once the voltage is removed the circuit breaker will re-close within a second or 2.

CIRCUIT PROTECTION - FUSIBLE LINKS

Fusible link is wire designed to melt and break continuity when excessive current is applied. It is often located between or near the battery and starter or electrical center. Use a continuity tester or a DMM at each end of the wire containing the fusible link in order to determine if it is broken. If broken, it must be replaced with fusible link of the same gage size.

Repairing a Fusible Link

IMPORTANT: Fusible links cut longer than 225 mm (approximately 9 in) will not provide sufficient overload protection.

Refer to **Splicing Copper Wire Using Splice Clips** .

WIRING REPAIRS

The Wiring Repairs section contains the following types of wiring repair information. Using these elements together will make wiring repair faster and easier:

- **Circuit Protection - Fuses**

- **Circuit Protection - Circuit Breakers**
- **Circuit Protection - Fusible Links**
- **Repairing Damaged Wire Insulation**
- **Splicing Copper Wire Using Splice Clips**
- **Splicing Copper Wire Using Splice Sleeves**
- **Splicing Twisted or Shielded Cable**
- **Splicing Inline Harness Diodes**
- **Heated Oxygen Sensor (HO2S) Wiring Repairs**
- **SIR/SRS Wiring Repairs**
- **Flat Wire Repairs**

REPAIRING DAMAGED WIRE INSULATION

If the conductive portion of the wire is not damaged, locate the problem and apply tape around the wire. If the damage is more extensive, replace the faulty segment of the wire. Refer to **Splicing Copper Wire Using Splice Clips** and follow the instruction to repair the wire.

Wire Size Conversion

Metric Wire Sizes (mm 2)	AWG Sizes
0.22	24
0.35	22
0.5	20
0.8	18
1.0	16
2.0	14
3.0	12
5.0	10
8.0	8
13.0	6
19.0	4
32.0	2
50.0	1/0

FLAT WIRE REPAIRS

NOTE: **The flat wire within the flex wiring harness is not serviceable. If an open or short exists within the flex wiring harness the complete harness must be replaced.**

HEATED OXYGEN SENSOR (HO2S) WIRING REPAIRS

Tools Required

J-38125 Terminal Repair Kit. See **Special Tools and Equipment** .

NOTE: Do not solder repairs under any circumstances as this could result in the air reference being obstructed.

If the heated oxygen sensor pigtail wiring, connector, or terminal is damaged the entire oxygen sensor assembly must be replaced. Do not attempt to repair the wiring, connector, or terminals. In order for the sensor to function properly it must have a clean air reference. This clean air reference is obtained by way of the oxygen sensor signal and heater wires. Any attempt to repair the wires, connectors or terminals could result in the obstruction of the air reference and degrade oxygen sensor performance.

The following guidelines should be used when servicing the heated oxygen sensor:

- Do not apply contact cleaner or other materials to the sensor or vehicle harness connectors. These materials may get into the sensor, causing poor performance. Also, the sensor pigtail and harness wires must not be damaged in such a way that the wires inside are exposed. This could provide a path for foreign materials to enter the sensor and cause performance problems.
- Neither the sensor nor vehicle lead wires should be bent sharply or kinked. Sharp bends, kinks, etc., could block the reference air path through the lead wire.
- Do not remove or defeat the oxygen sensor ground wire (where applicable). Vehicles that utilize the ground wire sensor may rely on this ground as the only ground contact to the sensor. Removal of the ground wire will also cause poor engine performance.
- To prevent damage due to water intrusion, be sure that the peripheral seal remains intact on the vehicle harness connector.

The engine harness may be repaired using the **J-38125** . See **Special Tools and Equipment** .

SPLICING COPPER WIRE USING SPLICE CLIPS

IMPORTANT: When making a splice in an area that may be exposed to moisture use a crimp and seal splice sleeve instead of a Splice Clip. Refer to Splicing Copper Wire Using Splice Sleeves

Tools Required

J-38125 Terminal Repair Kit. See **Special Tools and Equipment** .

1. Open the harness.
    - If the harness is taped, remove the tape.
    - To avoid wiring insulation damage, use a sewing ripper in order to cut open the harness.
    - If the harness has a black plastic conduit, pull out the desired wire.
2. Cut the wire.
    - Cut as little wire off the harness as possible.
    - Ensure that each splice is at least 40 mm (1.5 in) away from other splices, harness branches and

connectors. This helps prevent moisture from bridging adjacent splices and causing damage.

3. Select the proper size and type of wire.
   - The wire must be of equal or greater size than the original (except fusible link).
   - The wire's insulation must have the same or higher temperature rating.
     - Use general purpose insulation for areas that are not subject to high temperatures.
     - Use a cross-linked polyethylene insulated wire for areas where high temperatures are expected.

IMPORTANT: Use cross-linked polyethylene wire to replace PVC, but do not replace cross-linked polyethylene with PVC.
Cross-linked polyethylene wire is not fuel resistant. Do not use to replace wire where there is the possibility of fuel contact.

4. Strip the insulation.
   - Select the correct size opening in the wire stripper or work down from the largest size.
   - Strip approximately 7.5 mm (5/16 in) of insulation from each wire to be spliced.
5. Select the proper clip to secure the splice. Follow the instructions in the **J-38125** in order to determine the proper clip size crimp tool and anvil. See **Special Tools and Equipment** .
6. Overlap the 2 stripped wire ends and hold them between thumb and forefinger.

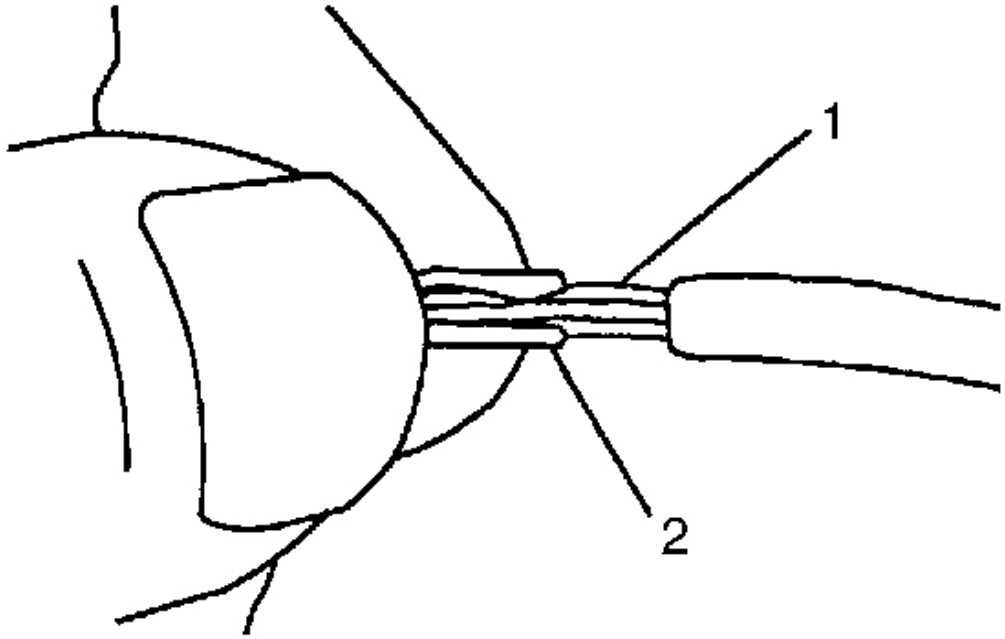

Fig. 4: Identifying Splice Clip & Stripped Wires Terminal Identification
Courtesy of GENERAL MOTORS CORP.

7. Center the splice clip (2) over the stripped wires (1) and hold the clip in place.
    - Ensure that the wires extend beyond the clip in each direction.
    - Ensure that no insulation is caught under the clip.

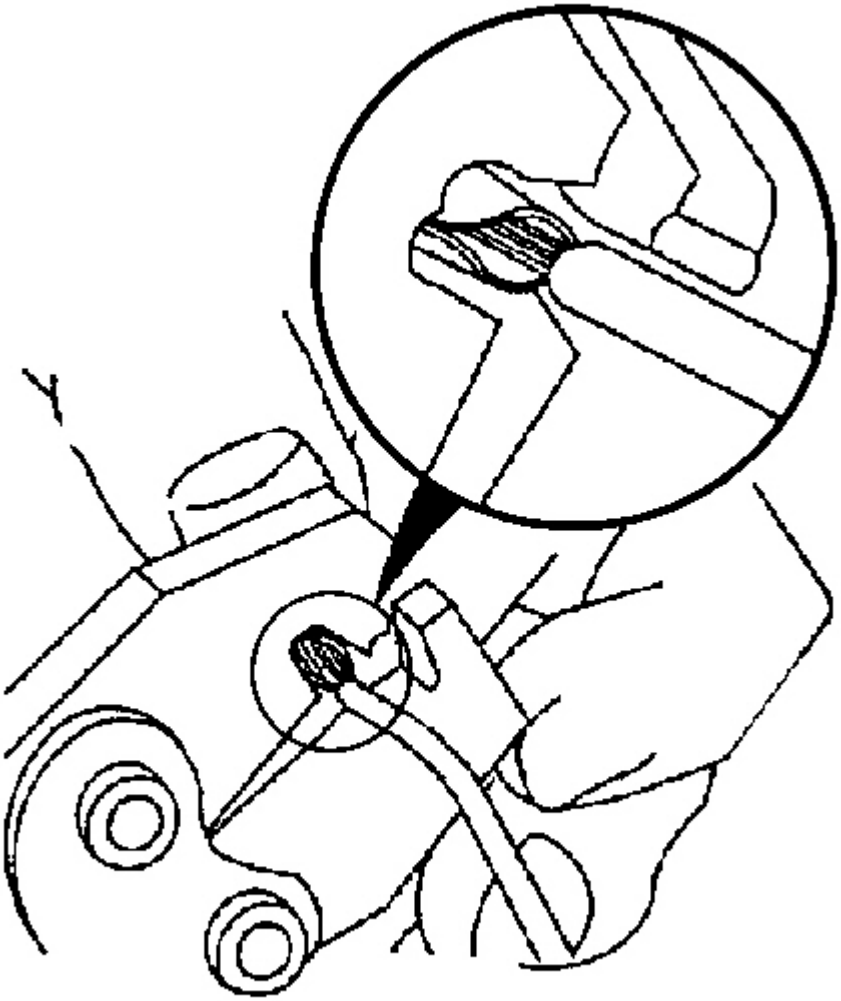

Fig. 5: Centering Crimp Tool Over Splice Clip & Wires Terminal Identification
Courtesy of GENERAL MOTORS CORP.

8. Center the crimp tool over the splice clip and wires.
9. Apply steady pressure until the crimp tool closes.

   Ensure that no strands of wire are cut.

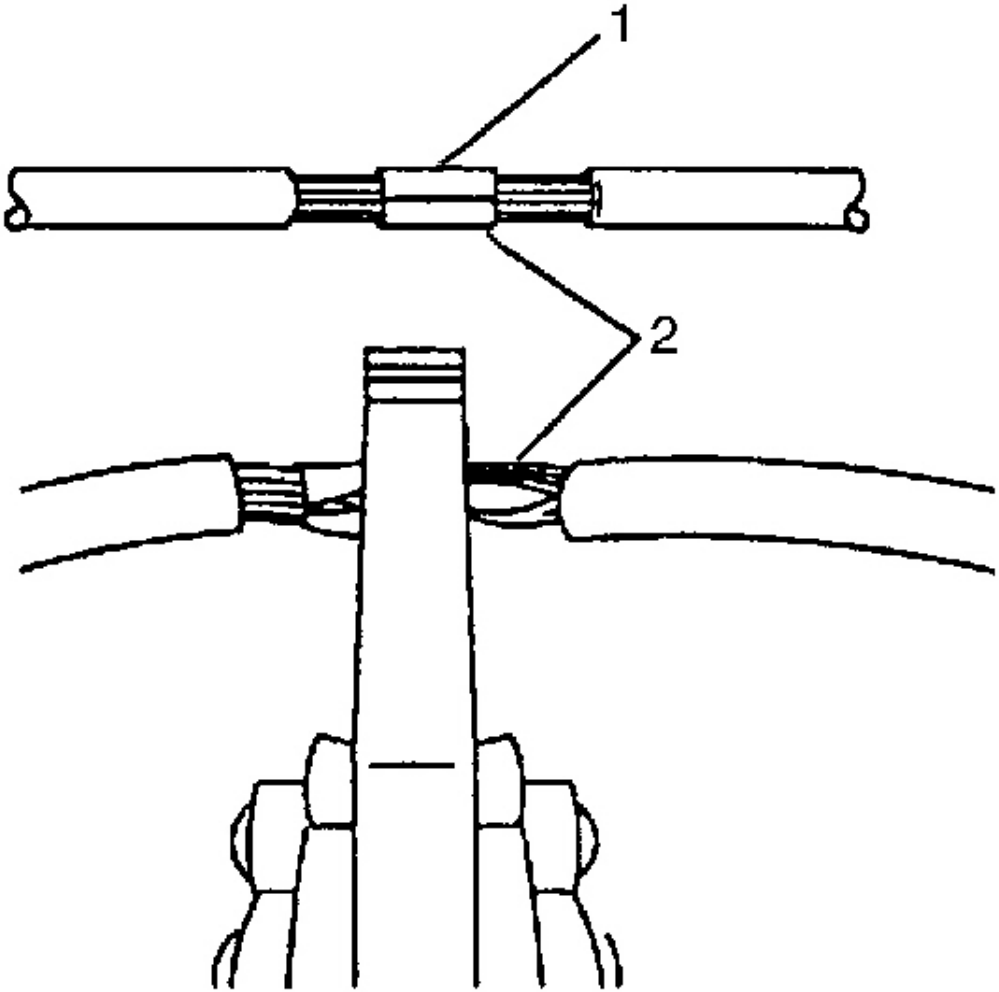

Fig. 6: Crimping Splice Clip & Wires Terminal Identification
Courtesy of GENERAL MOTORS CORP.

10. Crimp the splice on each end (2).

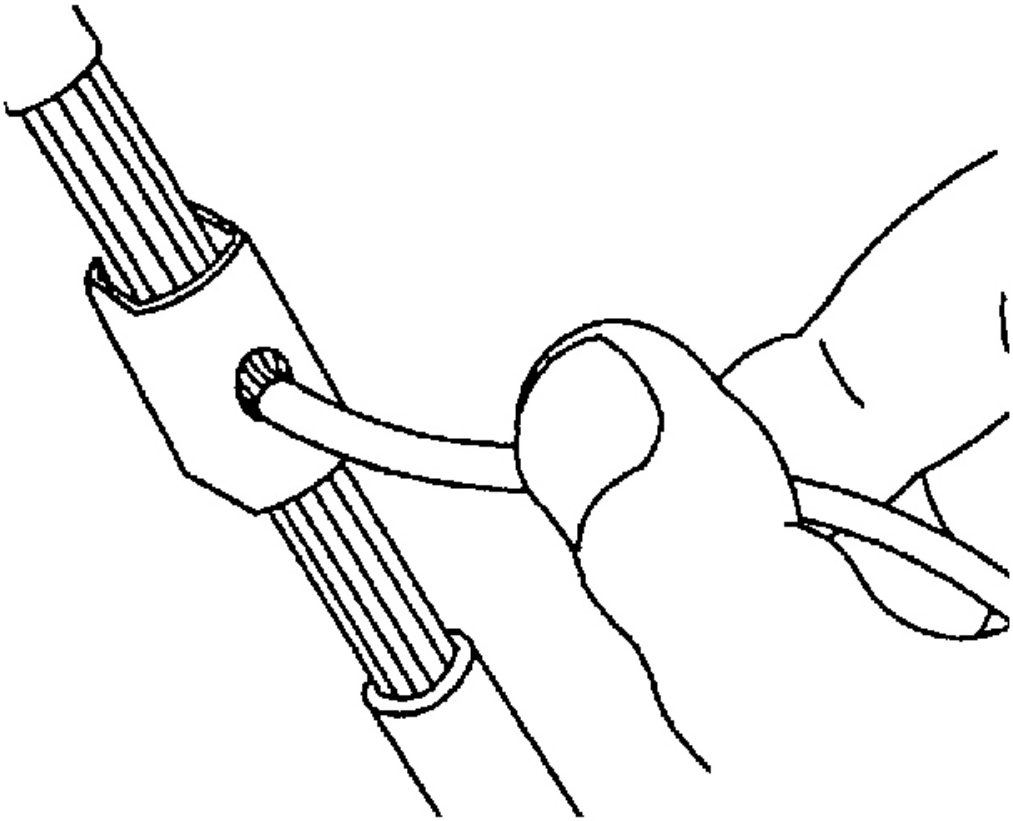

Fig. 7: Applying Solder To Back Of Clip Opening Terminal Identification
Courtesy of GENERAL MOTORS CORP.

11. Apply 60/40 rosin core solder to the opening in the back of the clip. Follow the manufacturer's instructions for the solder equipment.

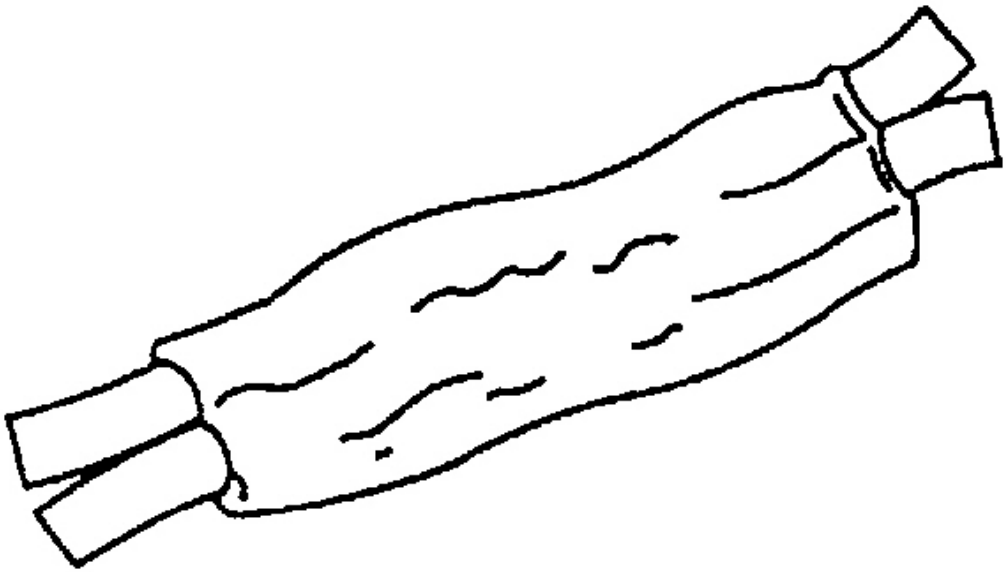

Fig. 8: Applying Electrical Tape Terminal Identification
Courtesy of GENERAL MOTORS CORP.

12. Tape the splice. Roll on enough tape in order to duplicate the thickness of the insulation on the existing wires.

Fig. 9: Additional Splice Taping Terminal Identification
Courtesy of GENERAL MOTORS CORP.

13. Additional tape can be applied to the wire if the wire does not belong in a conduit or another harness covering. Use a winding motion in order to cover the first piece of tape.

SPLICING COPPER WIRE USING SPLICE SLEEVES

Tools Required

J-38125 Terminal Repair Kit. See **Special Tools and Equipment** .

IMPORTANT: Use only duraseal splice sleeves, other splice sleeves may not protect the splice from moisture or provide a good electrical connection.

Use duraseal splice sleeves to form a one-to-one splice on all types of insulation except tefzel and coaxial. Use duraseal splice sleeves where there is special requirements such as moisture sealing. Follow the instructions below in order to splice copper wire using duraseal splice sleeves.

Splicing Copper Wire Using Splice Sleeves

Splice Sleeve Color	Crimp Tool Nest Color	Wire Gage AWG/(Metric)
Salmon 12089189	Red	20,18 / (0.5, 0.8)
Blue 12089190	Blue	16, 14 / (1.0, 2.0)
Yellow 12089191	Yellow	12, 10 / (3.0, 5.0)

1. Open the harness.
   - If the harness is taped, remove the tape.
   - To avoid wiring insulation damage, use a sewing ripper in order to cut open the harness.
   - If the harness has a black plastic conduit, pull out the desired wire.
2. Cut the wire.
   - Cut as little wire off the harness as possible.
   - Ensure that each splice is at least 40 mm (1.5 in) away from other splices, harness branches and connectors. This helps prevent moisture from bridging adjacent splices and causing damage.

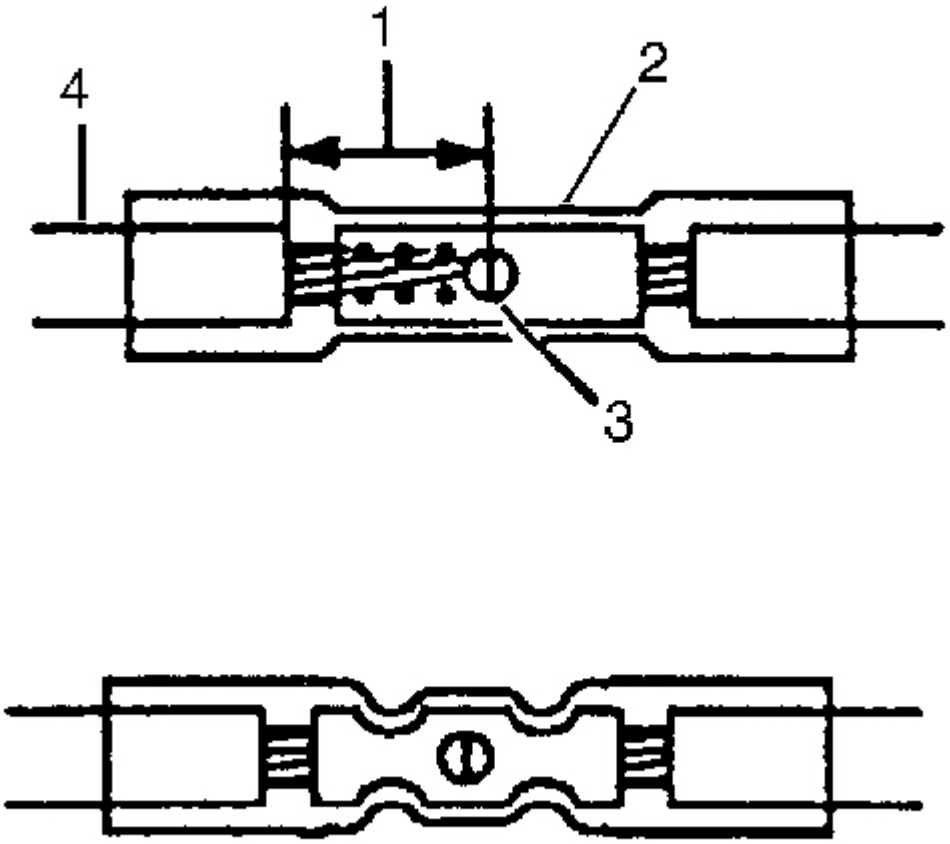

Fig. 10: Proper Crimping Of Solderless Connector Terminal Identification
Courtesy of GENERAL MOTORS CORP.

3. Select the proper size and type of wire.
   - The wire must be of equal or greater size than the original.
   - The wires insulation must have the same or higher temperature rating (4).
     - Use general purpose insulation for areas that are not subject to high temperatures.
     - Use a cross-linked polyethylene insulated wire for areas where high temperatures are expected.

IMPORTANT: Use cross-linked polyethylene wire to replace PVC, but do not replace cross-linked polyethylene with PVC.
Cross-linked polyethylene wire is not fuel resistant. Do not use to replace wire where there is the possibility of fuel contact.

4. Strip the insulation.
    - Select the correct size opening in the wire stripper or work down from the largest size.
    - Strip approximately 7.5 mm (5/16 in) of insulation from each wire to be spliced (1).
5. Select the proper duraseal splice sleeve (2) and the required crimp nest tool, refer to the Crimp and Seal Splice Table.
6. Place the duraseal splice sleeve in the J-38125-8 (12085115) crimp tool nest so that the crimp falls at point 1 on the splice.
7. Close the hand crimper handles slightly in order to hold the duraseal splice sleeve firmly in the proper crimp tool nest.
8. Insert the wires into the duraseal splice sleeve until the wire hits the barrel stop. The splice sleeve has a stop in the middle of the barrel in order to prevent the wire from passing through the splice (3).
9. Close the handles of the J-38125-8 (12085115) until the crimper handles open when released. The crimper handles will not open until the proper amount of pressure is applied to the splice sleeve.
10. Shrink the insulation around the splice.
    - Using the heat torch apply heat to the crimped area of the barrel.
    - Gradually move the heat barrel to the open end of the tubing.
        - The tubing will shrink completely as the heat is moved along the insulation.
        - A small amount of sealant will come out of the end of the tubing when sufficient shrinkage is achieved.

SPLICING TWISTED OR SHIELDED CABLE

Twisted/shielded cable is used in order to protect wiring from electrical noise. Two-conductor cable of this construction is used between the radio and the Delco-Bose(R) speaker/amplifier units and other applications where low level, sensitive signals must be carried. Follow the instructions below in order to repair the twisted/shielded cable.

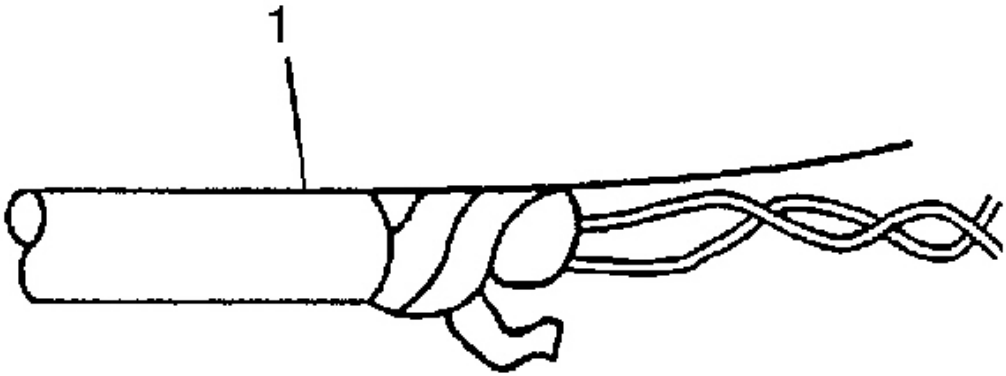

Fig. 11: Outer Wiring Jacket Terminal Identification
Courtesy of GENERAL MOTORS CORP.

1. Remove the outer jacket (1). Use care not to cut into the drain wire of the mylar tape.
2. Unwrap the tape. Do not remove the tape. Use the tape in order to rewrap the twisted conductors after the splice is made.

Fig. 12: Inspecting Wiring Connections Terminal Identification
Courtesy of GENERAL MOTORS CORP.

3. Prepare the splice. Untwist the conductors and follow the splicing instructions for copper wire. Staggering the splices by 65 mm (2.5 in) is recommended.

IMPORTANT: Apply the mylar tape with the aluminum side inward. This ensures good

electrical contact with the drain wire.

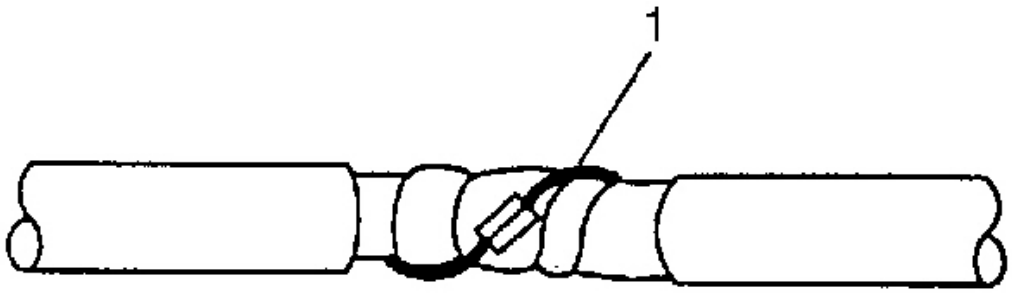

Fig. 13: View Of Diode On Wire Terminal Identification
Courtesy of GENERAL MOTORS CORP.

4. Re-assemble the cable.
   - Rewrap the conductors with the mylar tape.
   - Use caution not to wrap the drain wire in the tape (1).
   - Follow the splicing instructions for copper wire and splice the drain wire.
   - Wrap the drain wire around the conductors and tape with mylar tape.

Fig. 14: Repaired Wire Covered With Electrical Tape Terminal Identification
Courtesy of GENERAL MOTORS CORP.

5. Tape over the entire cable. Use a winding motion when you apply the tape.

SPLICING INLINE HARNESS DIODES

Many vehicle electrical systems use a diode to isolate circuits and protect the components from voltage spikes.

When installing a new diode use the following procedure.

1. Open the harness.
   - If the harness is taped, remove the tape.
   - To avoid wiring insulation damage, use a sewing ripper in order to cut open the harness.
   - If the harness has a black plastic conduit, pull out the diode.
2. If the diode is taped to the harness, remove all of the tape.
3. Check and record the current flow direction and orientation of diode.
4. Remove the inoperative diode from the harness with a suitable soldering tool.

IMPORTANT: If the diode is located next to a connector terminal remove the terminal(s) from the connector to prevent damage from the soldering tool.

5. Carefully strip away a section of insulation next to the old soldered portion of the wire(s). Do not remove any more than is needed to attach the new diode.
6. Check current flow direction of the new diode, being sure to install the diode with correct bias. Reference the appropriate service manual wiring schematic to obtain the correct diode installation position.
7. Attach the new diode to the wire(s) using 60/40 rosin core solder. Before soldering attach some heat sinks (aluminum alligator clips) across the diode wire ends to protect the diode from excessive heat. Follow the manufacturer's instruction for the soldering equipment.
8. Reinstall terminal(s) into the connector body if previously removed.

IMPORTANT: To prevent shorts to ground and water intrusion, completely cover all exposed wire and diode attachment points with tape.

9. Tape the diode to the harness or connector using electrical tape.

SIR/SRS WIRING REPAIRS

Tools Required

J-38125 Terminal Repair Kit. See **Special Tools and Equipment** .

The Supplemental Inflatable Restraint (SIR) System/Supplemental Restraint System (SRS) requires special wiring repair procedures due to the sensitive nature of the circuitry. Follow the specific procedures and instructions when working with the SIR/SRS system wiring, and the wiring components (such as connectors and terminals).

IMPORTANT: Do not use the terminals in the kit in order to replace damaged SIR/SRS system terminals unless specifically indicated by the terminal package.

The tool kit **J-38125** contains the following items:. See **Special Tools and Equipment** .

- Duraseal splice sleeves-In order to repair the SIR/SRS system wiring
- A wire stripping tool
- A special crimping tool
- A heat torch
- An instruction manual

The duraseal splice sleeves have the following 2 critical features:

- A special heat shrink sleeve environmentally seals the splice. The heat shrink sleeve contains a sealing adhesive inside.
- A cross hatched (knurled) core crimp provides necessary contact integrity for the sensitive, low energy circuits.

The **J-38125** also serves as a generic terminal repair kit. See **Special Tools and Equipment** . The kit contains the following items:

- A large sampling of common electrical terminals
- The correct tools in order to attach the terminals to the wires
- The correct tools in order to remove the terminals from the connectors

SIR/SRS Connector (Plastic Body and Terminal Metal Pin) Repair

Use the connector repair assembly packs in order to repair the damaged SIR/SRS wire harness connectors and the terminals. Do not use the connector repair assembly pack in order to repair the pigtails. These kits include an instruction sheet and the duraseal splice sleeves. Use the duraseal splice sleeves in order to splice the new wires, connectors, and terminals to the harness. The splice crimping tool is color keyed in order to match the splices from the **J-38125** . See **Special Tools and Equipment** . You must use the splice crimping tool in order to apply these splices.

The terminals in the SIR/SRS system are made of a special metal. This metal provides the necessary contact integrity for the sensitive, low energy circuits. These terminals are only available in the connector repair assembly packs. Do not substitute any other terminals for those in the assembly packs.

If the individual terminals are damaged on the sensing and diagnostic module (SDM) harness connector, use one of the following 2 components in order to replace the SDM harness connector:

- The SDM harness connector pigtail assembly
- The SDM harness connector replacement kit

If the individual terminals are damaged on any other SIR/SRS connection, use the appropriate connector repair assembly pack in order to replace the entire connection. Replace the entire SIR/SRS wiring harness, if needed, in order to maintain SIR/SRS circuit integrity.

SIR/SRS Wire Pigtail Repair

IMPORTANT: Do not make wire, connector, or terminal repairs on components with wire pigtails.

A wire pigtail is a wire or wires attached directly to the device (not by a connector). If a wiring pigtail is damaged, you must replace the entire component (with pigtail). The inflatable restraint steering wheel module coil is an example of a pigtail component.

SIR/SRS Wire Repair

IMPORTANT: Refer to Wiring Repairs in order to determine the correct wire size for the circuit you are repairing. You must obtain this information in order to ensure circuit integrity.

If any wire except the pigtail is damaged, repair the wire by splicing in a new section of wire of the same gage size (0.5 mm, 0.8 mm, 1.0 mm etc.). Use the duraseal splice sleeves and splice crimping tool from the **J-38125** . See **Special Tools and Equipment** . Use the following wiring repair procedures in order to ensure the integrity of the duraseal splice sleeves.

SIR/SRS Wiring Repairs

Splice Sleeve Color	Crimp Tool Nest Color	Wire Gage mm^2 / (AWG)
Salmon (Yellow-Pink) 12089189	Red (1)	0.035-0.8/(18-20)
Blue 12089190	Blue (2)	1-2/(14-16)
Yellow 12089191	Yellow (3)	3-5/(10-12)

IMPORTANT: You must perform the following procedures in the listed order. Repeat the procedure if any wire strands are damaged. You must obtain a clean strip with all of the wire strands intact.

1. Open the harness by removing any tape:
   - Use a sewing seam ripper (available from sewing supply stores) in order to cut open the harness in order to avoid wire insulation damage.
   - Use the duraseal splice sleeves on all types of insulation except tefzel and coaxial.
   - Do not use the crimp and duraseal splice sleeve to form a splice with more than 2 wires coming together.
2. Cut as little wire off the harness as possible. You may need the extra length of wire in order to change the location of a splice.

   Adjust splice locations so that each splice is at least 40 mm (1.5 in) away from the other splices, harness branches, or connectors.

3. Strip the insulation:

- When adding a length of wire to the existing harness, use the same size wire as the original wire.
- Perform one of the following items in order to find the correct wire size:
  - Find the wire on the schematic and convert the metric size to the equivalent AWG size.
  - Use an AWG wire gage.
  - If you are unsure of the wire size, begin with the largest opening in the wire stripper and work down until achieving a clean strip of the insulation.
- Strip approximately 7.5 mm (0.313 in) of insulation from each wire to be spliced.
- Do not nick or cut any of the strands. Inspect the stripped wire for nicks or cut strands.
- If the wire is damaged, repeat this procedure after removing the damaged section.

4. Select the proper duraseal splice sleeve according to the wire size. Refer to the above table at the beginning of the repair procedure for the color coding of the duraseal splice sleeves and the crimp tool nests.

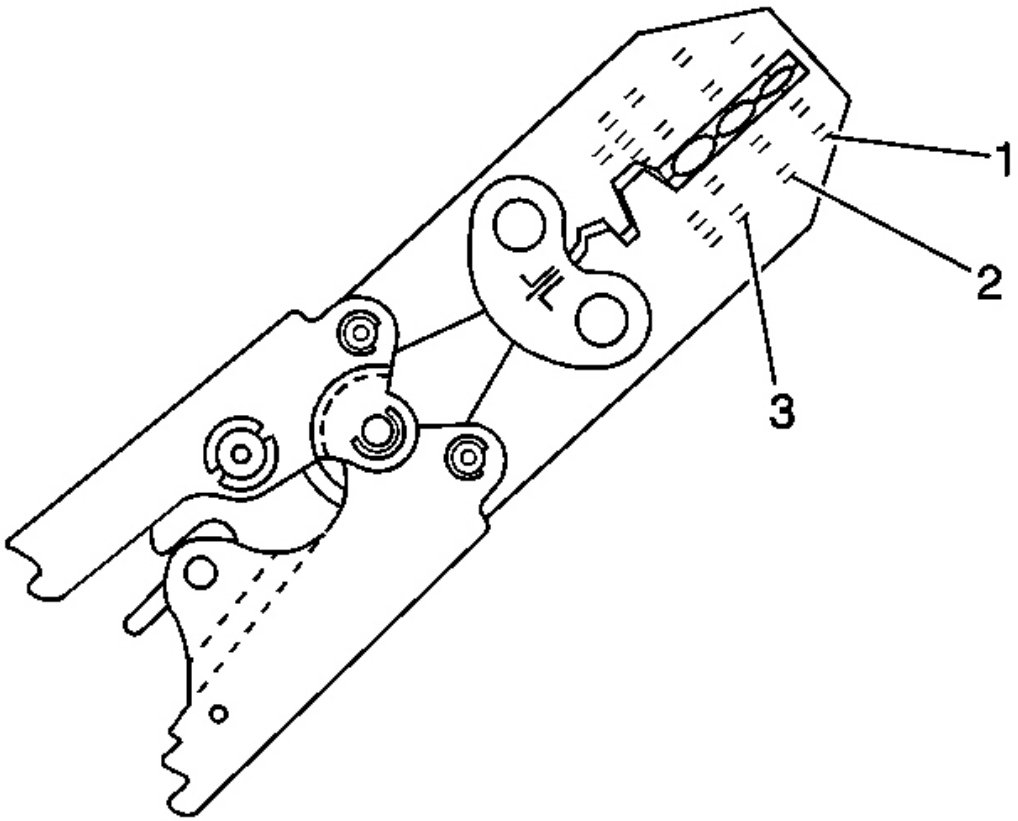

Fig. 15: Identifying Splice Crimp Tool Nests Terminal Identification
Courtesy of GENERAL MOTORS CORP.

5. Use the Splice Crimp Tool from the **J-38125** to crimp duraseal splice sleeve. See **Special Tools and Equipment** . In order to position the duraseal splice sleeve in the proper color nest of the Splice Crimp Tool, refer to the table at the beginning of this repair procedure.

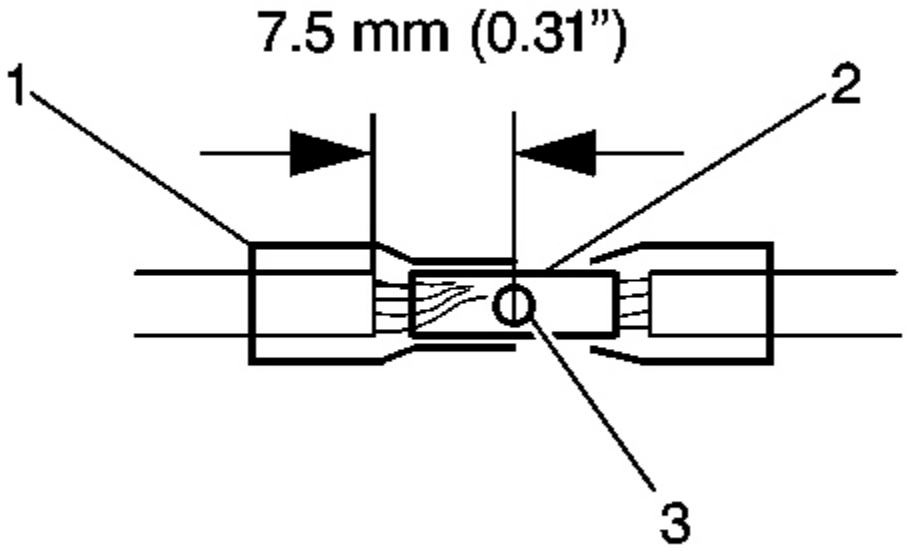

Fig. 16: Identifying Durasteel Splice Sleeve Terminal Identification
Courtesy of GENERAL MOTORS CORP.

6. Place the duraseal splice sleeve in the nest. Ensure that the crimp falls midway between the end of the barrel and the stop. The sleeve has a stop (3) in the middle of the barrel (2) in order to prevent the wire (1) from going further. Close the hand crimper handles slightly in order to firmly hold the duraseal splice sleeve in the proper nest.

Fig. 17: Crimped Duraseal Splice Sleeve Terminal Identification
Courtesy of GENERAL MOTORS CORP.

7. Insert the wire into the splice sleeve barrel until the wire hits the barrel stop.
8. Tightly close the handles of the crimp tool until the crimper handles open when released.

   The crimper handles will not open until you apply the proper amount of pressure to the duraseal splice sleeve. Repeat steps 4 and 5 for the opposite end of the splice.

Fig. 18: Identifying Heated Splice Sleeve Terminal Identification
Courtesy of GENERAL MOTORS CORP.

9. Using the heat torch, apply heat to the crimped area of the barrel.
10. Gradually move the heat barrel to the open end of the tubing:
    - The tubing will shrink completely as the heat is moved along the insulation.
    - A small amount of sealant will come out of the end of the tubing when sufficient shrinkage is achieved.

SIR/SRS System Wire Splice Repair

Apply a new splice (not sealed) from the **J-38125** if damage occurs to any of the original equipment splices (3 wires or more) in the SIR/SRS wiring harness. See **Special Tools and Equipment** . Carefully follow the

instructions included in the kit for proper splice clip application.

Connector Position Assurance (CPA)

The connector position assurance (CPA) is a small plastic insert that fits through the locking tabs of all the SIR/SRS system electrical connectors. The CPA ensures that the connector halves cannot vibrate apart. You must have the CPA in place in order to ensure good contact between the SIR/SRS mating terminals.

Terminal Position Assurance (TPA)

The terminal position assurance (TPA) insert resembles the plastic combs used in the control module connectors. The TPA keeps the terminal securely seated in the connector body. Do not remove the TPA from the connector body unless you remove a terminal for replacement.

CONNECTOR REPAIRS

The Connector Repairs section contains the following types of connector repair information. Using these elements together will make connector repair faster and easier:

- **Connector Position Assurance Locks**
- **Terminal Position Assurance Locks**
- **Push to Seat Connectors**
- **Pull to Seat Connectors**
- **Micro-Pack 100W Connectors**
- **Micro .64 Connectors**

CONNECTOR POSITION ASSURANCE LOCKS

The connector position assurance (CPA) is a small plastic insert that fits through the locking tabs of the connector. CPAs are used in various connectors throughout the vehicle. CPAs are also used in all SIR system electrical connectors. The CPA ensures that the connector halves cannot vibrate apart. You must have the CPA in place in order to ensure good contact between the mating terminals, of the connector.

TERMINAL POSITION ASSURANCE LOCKS

The terminal position assurance (TPA) insert resembles the plastic combs used in the control module connectors. The TPA keeps the terminal securely seated in the connector body. Do not remove the TPA from the connector body unless you remove a terminal for replacement.

PUSH TO SEAT CONNECTORS

Terminal Removal

Follow the steps below in order to repair push to seat connectors.

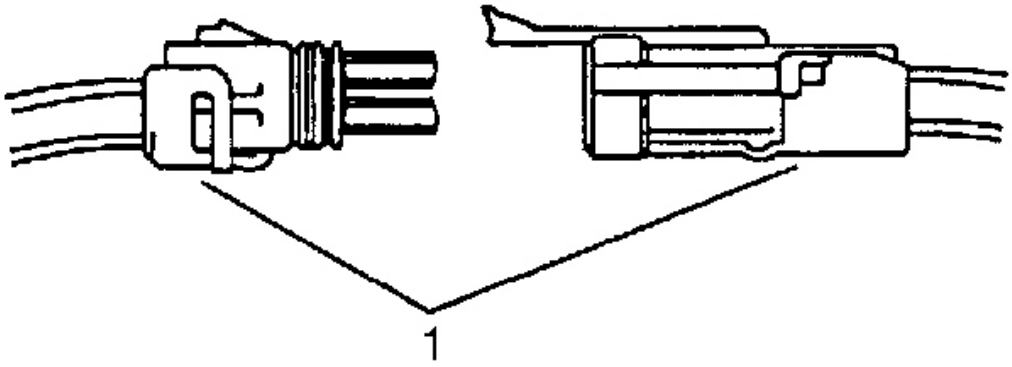

Fig. 19: Separating Weather Pack Connector Halves Terminal Identification
Courtesy of GENERAL MOTORS CORP.

1. Remove the terminal position assurance (TPA) device, the connector position assurance (CPA) device, and/or the secondary lock.
2. Separate the connector halves (1).

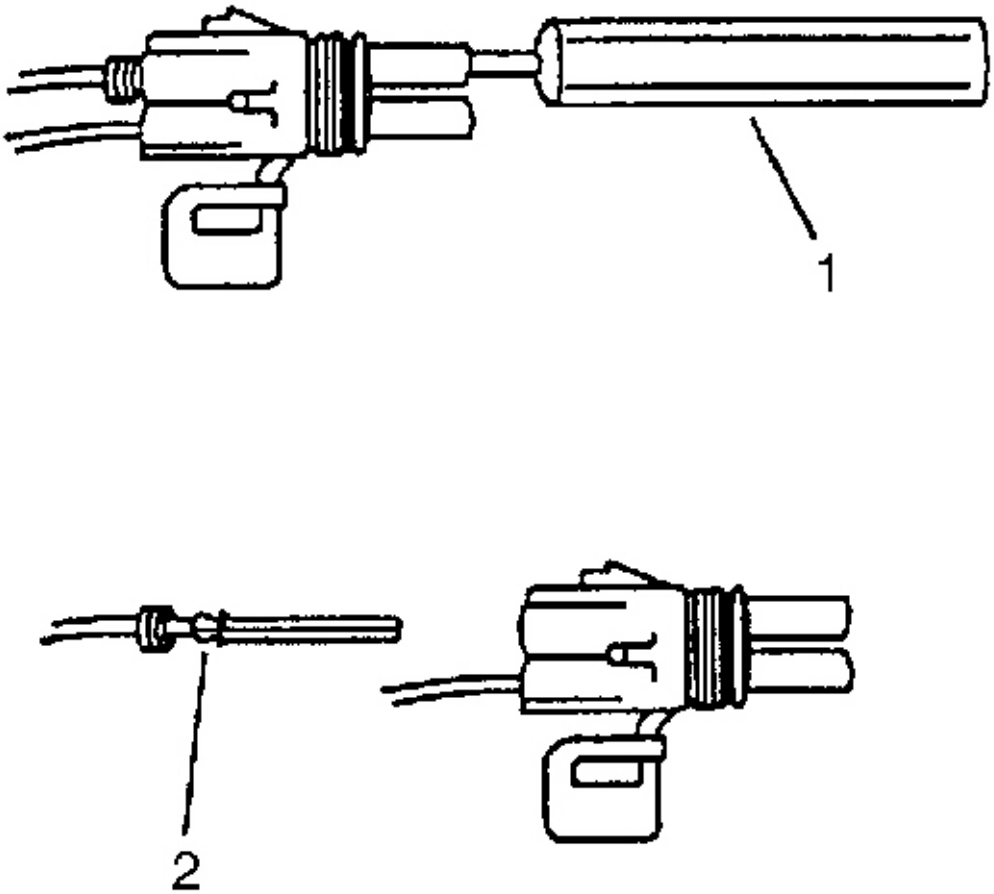

Fig. 20: Removing Cable & Terminal From Connector Terminal Identification
Courtesy of GENERAL MOTORS CORP.

3. Use the proper pick or removal tool (1) in order to release the terminal.
4. Gently pull the cable and the terminal (2) out of the back of the connector.

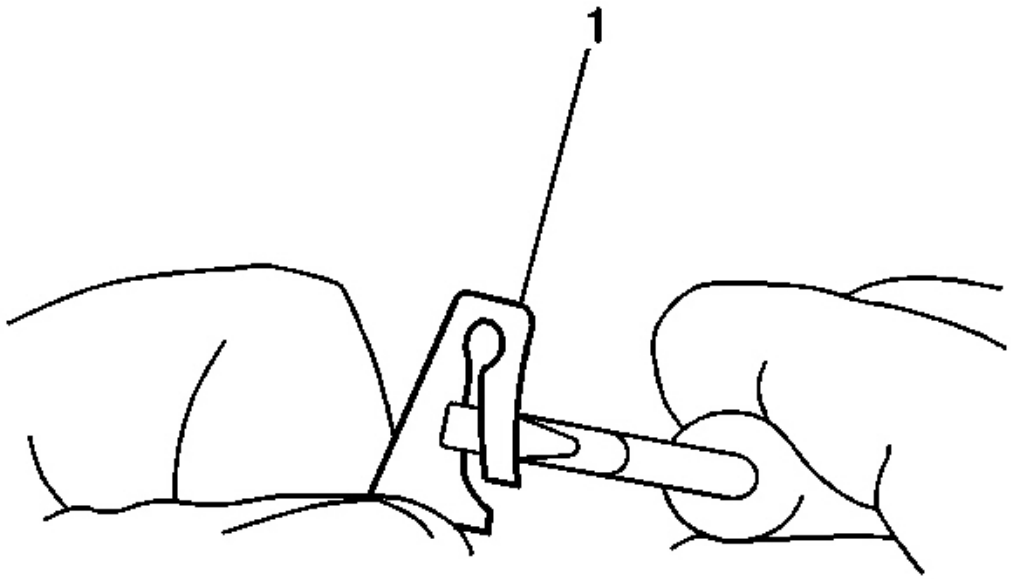

Fig. 21: Aligning Locking Device Terminal Identification
Courtesy of GENERAL MOTORS CORP.

5. Re-form the locking device if you are going to reuse the terminal (1).
6. To repair the terminal, refer to Terminal Repair.

Terminal Repair

1. Slip the cable seal away from the terminal.
2. Cut the wire as close to the terminal as possible.
3. Slip a new cable seal onto the wire.
4. Strip 5 mm (3/16 in) of insulation from the wire.
5. Crimp a new terminal to the wire.
6. Solder the crimp with rosin core solder.
7. Slide the cable seal toward the terminal.
8. Crimp the cable seal and the insulation.
9. If the connector is outside of the passenger compartment, apply grease to the connector.

Reinstalling Terminal

1. In order to reuse a terminal or lead assembly. Refer to **Wiring Repairs** .

2. Ensure that the cable seal is kept on the terminal side of the splice.
3. Insert the lead from the back until it catches.
4. Install the TPA, CPA and/or the secondary locks.

PULL TO SEAT CONNECTORS

Terminal Removal

If the terminal is visibly damaged or is suspected of having a faulty connection, the terminal should be replaced.

Follow the steps below in order to repair pull-to-seat connectors:

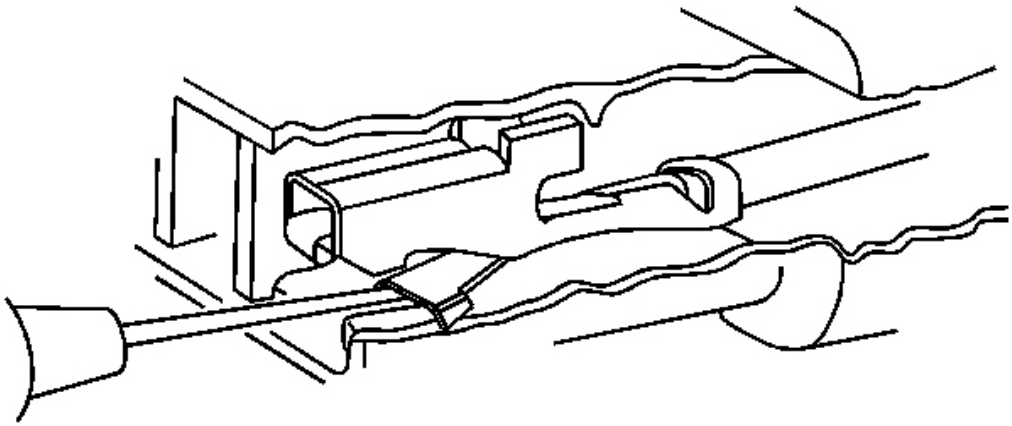

Fig. 22: Aligning Removal Tool Terminal Identification
Courtesy of GENERAL MOTORS CORP.

1. Remove the connector position assurance (CPA) device and/or the secondary lock.
2. Disconnect the connector from the component or separate the connectors for in-line connectors.
3. Remove the terminal position assurance (TPA) device.
4. Insert the proper pick or removal tool into the front of the connector body.

IMPORTANT: On connectors with more than one terminal the service loop may not be large enough to remove the terminal and crimp on a new one. If the terminal wire does not have a large enough service loop for removal, cut the wire 5 cm (2 in) behind the connector before removal.

5. Grasp the wire at the back of the connector body and gently push the terminal (1) out the front of the

connector body (3).

Terminal Repair

1. If the wire needed to be cut in order to remove the terminal, gently push a small length of the same size wire through the back of the connector cavity until there is enough wire exposed in order to crimp on a new terminal. If the wire was not cut, cut the existing wire as close to the old terminal as possible.
2. Strip 5 mm (3/16 in) of insulation from the wire.
3. Crimp a new terminal to the wire.
4. Solder the crimp with rosin core solder.

Terminal Installation

1. Align the terminal and pull the wire from the back of the connector in order to seat the terminal.
2. If necessary, cut the new wire to proper length and splice with existing circuit. Refer to **Splicing Copper Wire Using Splice Sleeves** .
3. If the connector is outside of the passenger compartment, apply dielectric grease to the connector.
4. Install the TPA, CPA and/or the secondary locks.

MICRO-PACK 100W CONNECTORS

Terminal Removal Procedure

1. Disconnect the connector from the component or separate the connector halves for in-line connectors.

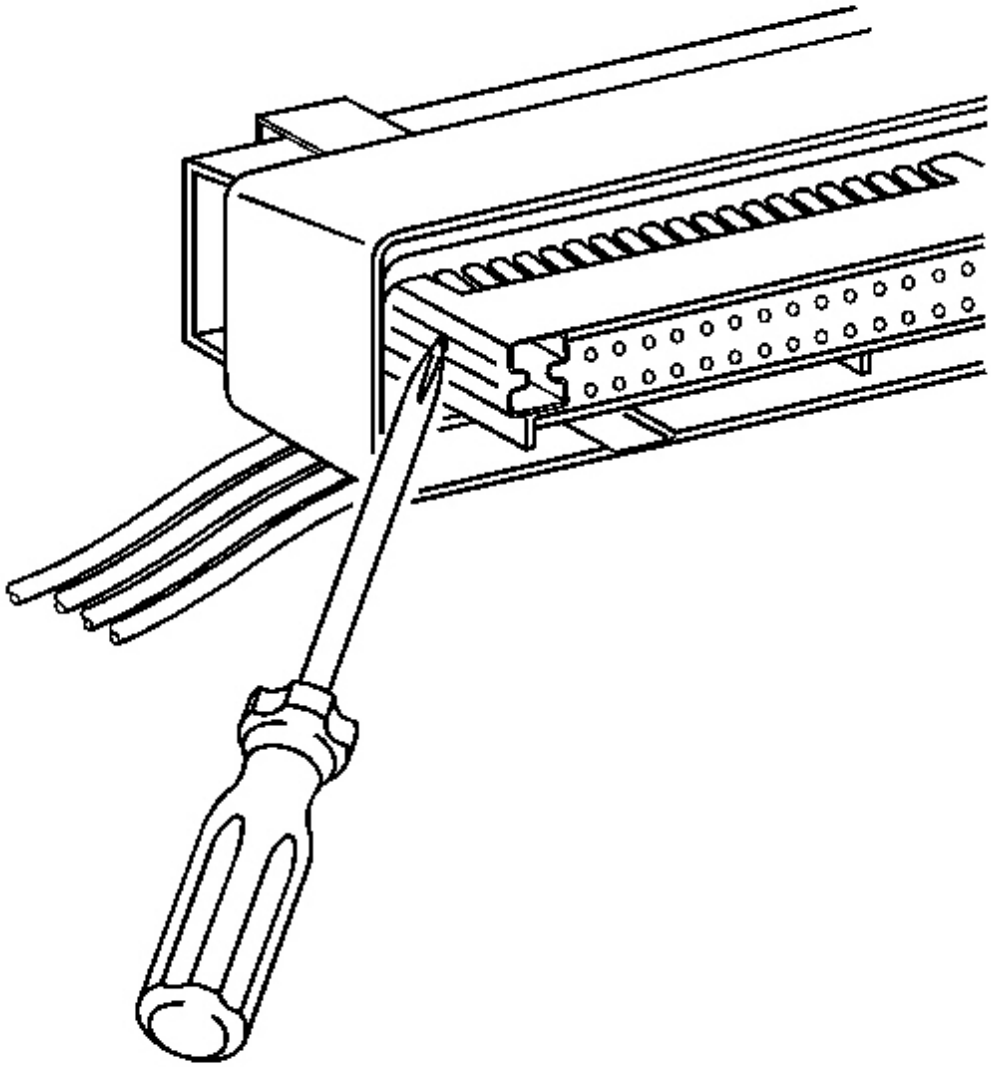

Fig. 23: Locating Nose Piece Locking Tabs Terminal Identification
Courtesy of GENERAL MOTORS CORP.

2. Locate the nose piece locking tabs that are positioned on the side of the connector nose piece.

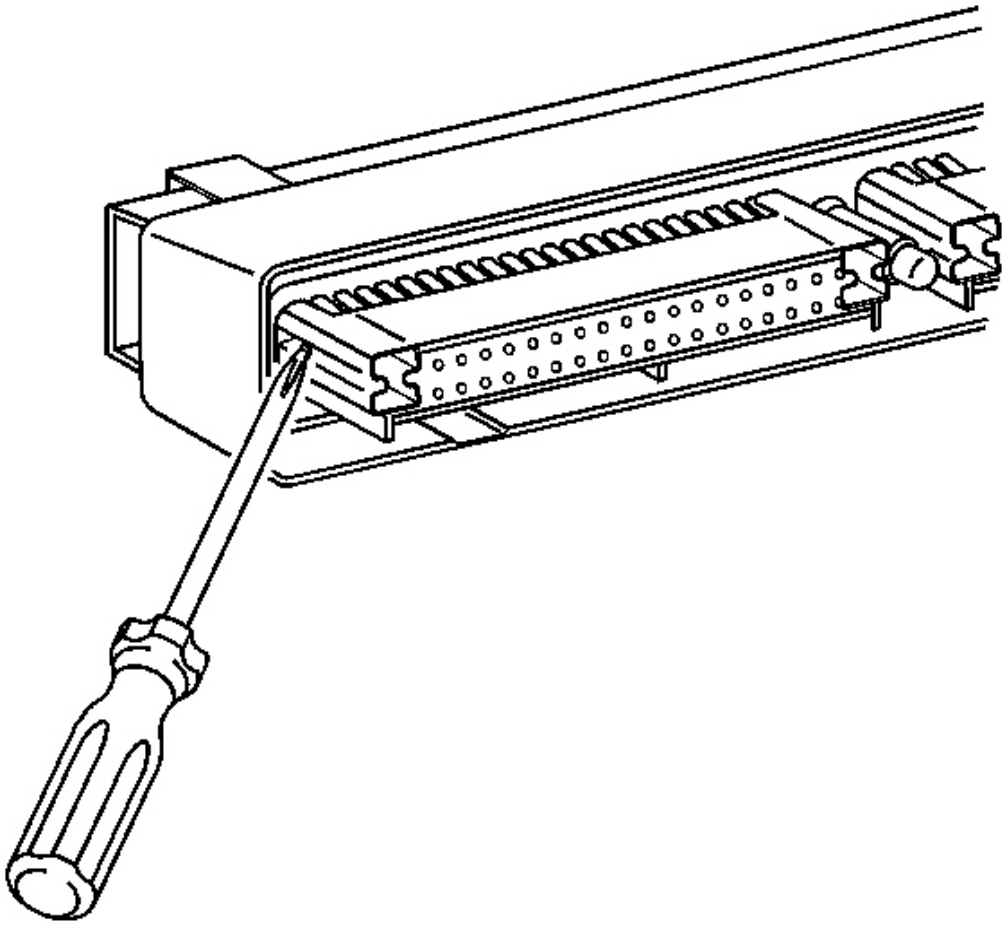

Fig. 24: Pushing In Locking Tabs Terminal Identification
Courtesy of GENERAL MOTORS CORP.

3. Use a small flat-bladed tool to push in one of the locking tabs while gently pushing on the same side of the nose piece.
4. Repeat the procedure for the other locking tab and remove the nose piece.
5. Remove the wire dress cover. The following is a general procedure for wire dress cover removal. Use this procedure as a guide, some dress cover removal procedures may vary.

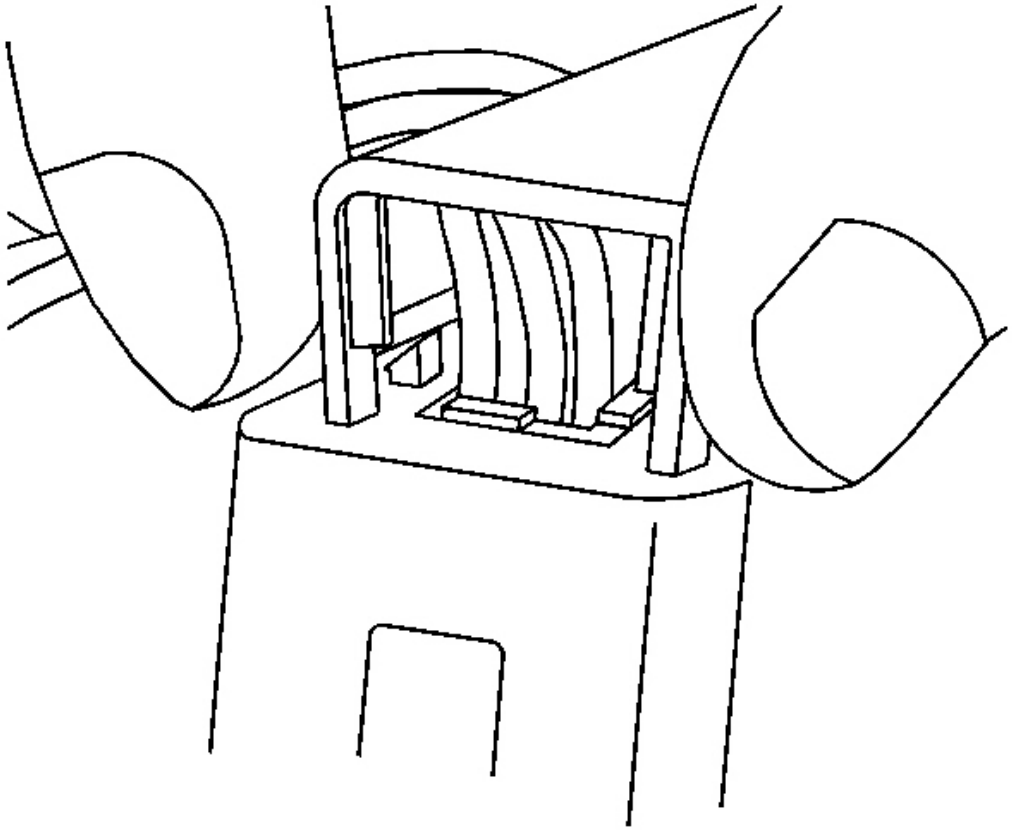

Fig. 25: Squeezing Cover Locking Legs Terminal Identification
Courtesy of GENERAL MOTORS CORP.

6. Use fingers to squeeze the 2 locking legs of the cover.

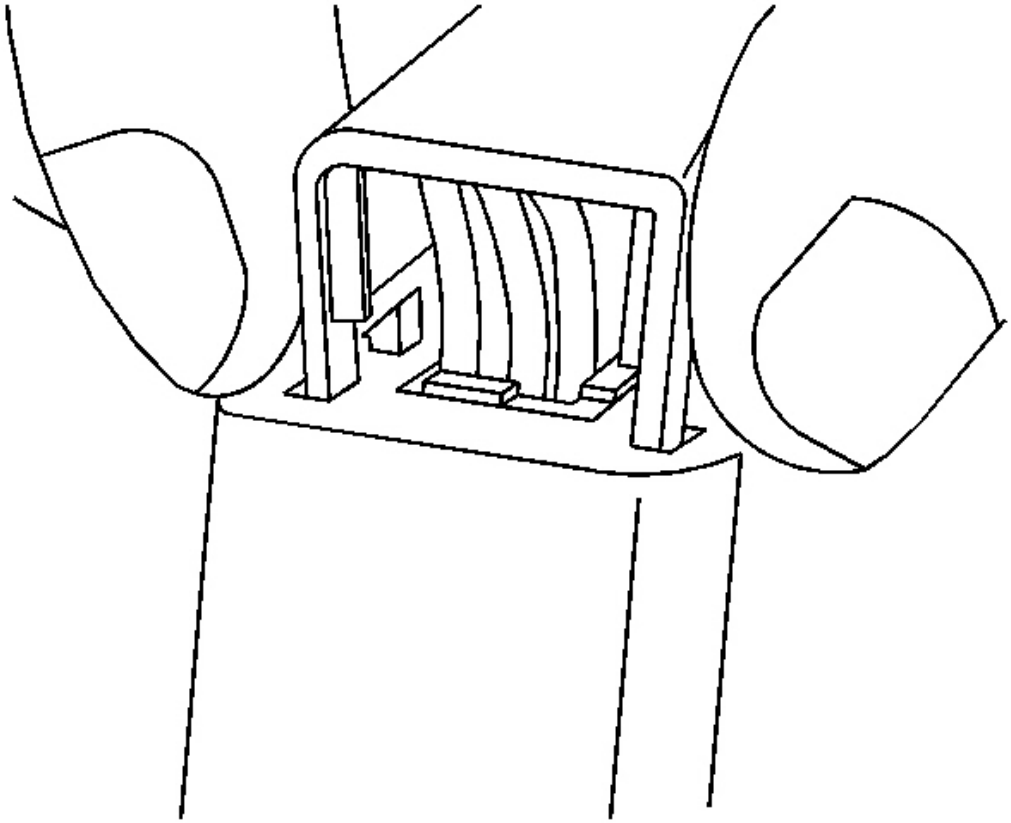

Fig. 26: Unseating Locking Legs Terminal Identification
Courtesy of GENERAL MOTORS CORP.

7. Apply pressure and gently rock the cover until one locking leg is unseated.

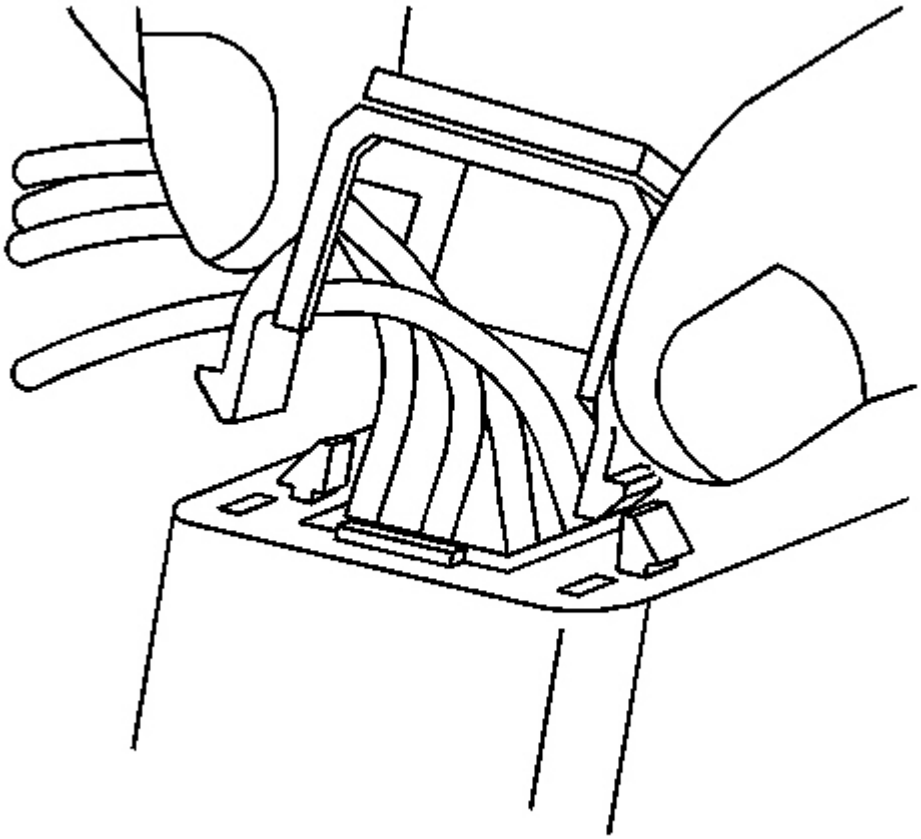

Fig. 27: Removing Wire Dress Cover Terminal Identification
Courtesy of GENERAL MOTORS CORP.

8. Continue to apply pressure and rock the cover until the second locking leg is unseated. Repeat procedure for the other side of the dress cover and remove the cover.

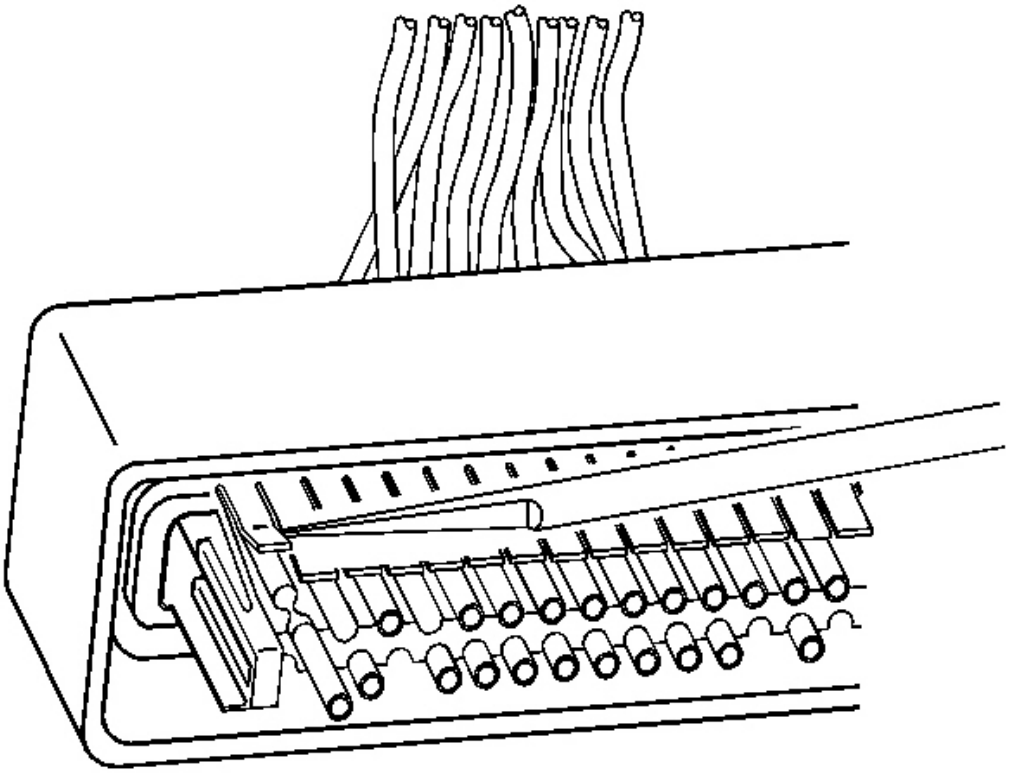

Fig. 28: Lifting Terminal Retaining Tab Terminal Identification
Courtesy of GENERAL MOTORS CORP.

9. Use J 38125-12A tool to gently lift the terminal retaining tab while gently pulling the wire out of the back of the connector. Always remember never use force when pulling a terminal out of a connector. If the terminal is severely bent or damaged, push the wire out of the front of the connector instead of pulling it through. This will prevent damage to the internal seals of the connector. Once the terminal is pushed out of the connector, cut the wire as close to the terminal as possible and pull the wire through the connector.

Terminal Repair Procedure

Use the appropriate wire assembly kit available through Saturn Service Parts.

1. Slide the new terminal into the correct cavity at the back of the connector.
2. Push the terminal into the connector until it locks into place. The new terminal should be even with the other terminals. Insure that the terminal is locked in place by gently pulling on the wire.
3. Replace the nose piece.
4. Replace the dress cover.

MICRO .64 CONNECTORS

Tools Required

J-38125 Terminal Repair Kit. See **Special Tools and Equipment** .

Terminal Removal Procedure

Follow the steps below in order to remove terminals from Micro 64 connectors.

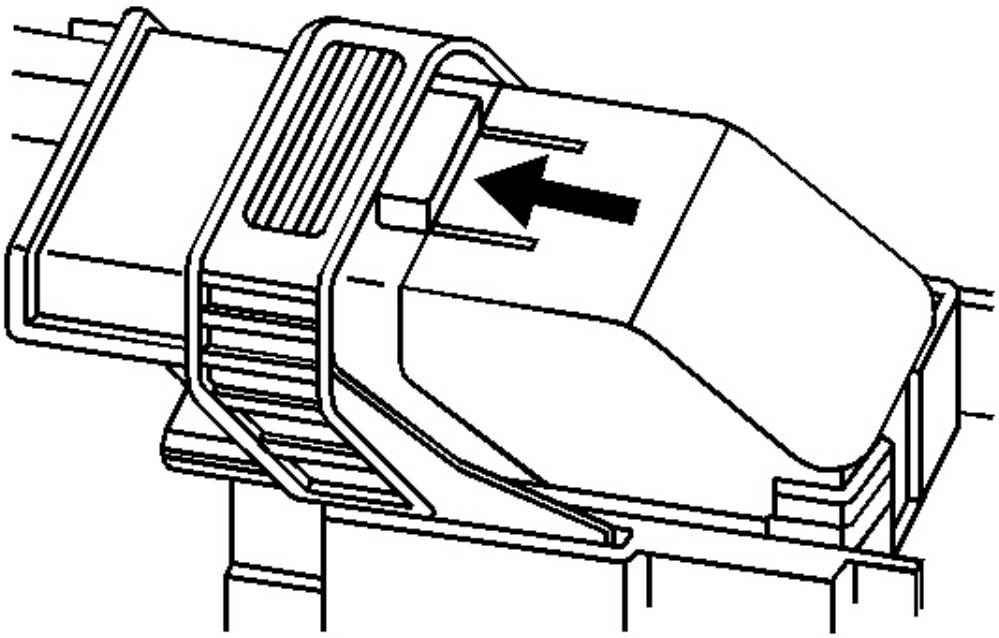

Fig. 29: Disengaging Lever Lock Terminal Identification
Courtesy of GENERAL MOTORS CORP.

1. Locate the lever lock on the wire dress cover. While depressing the lock, pull the lever over and past the lock.
2. Disconnect the connector from the component.

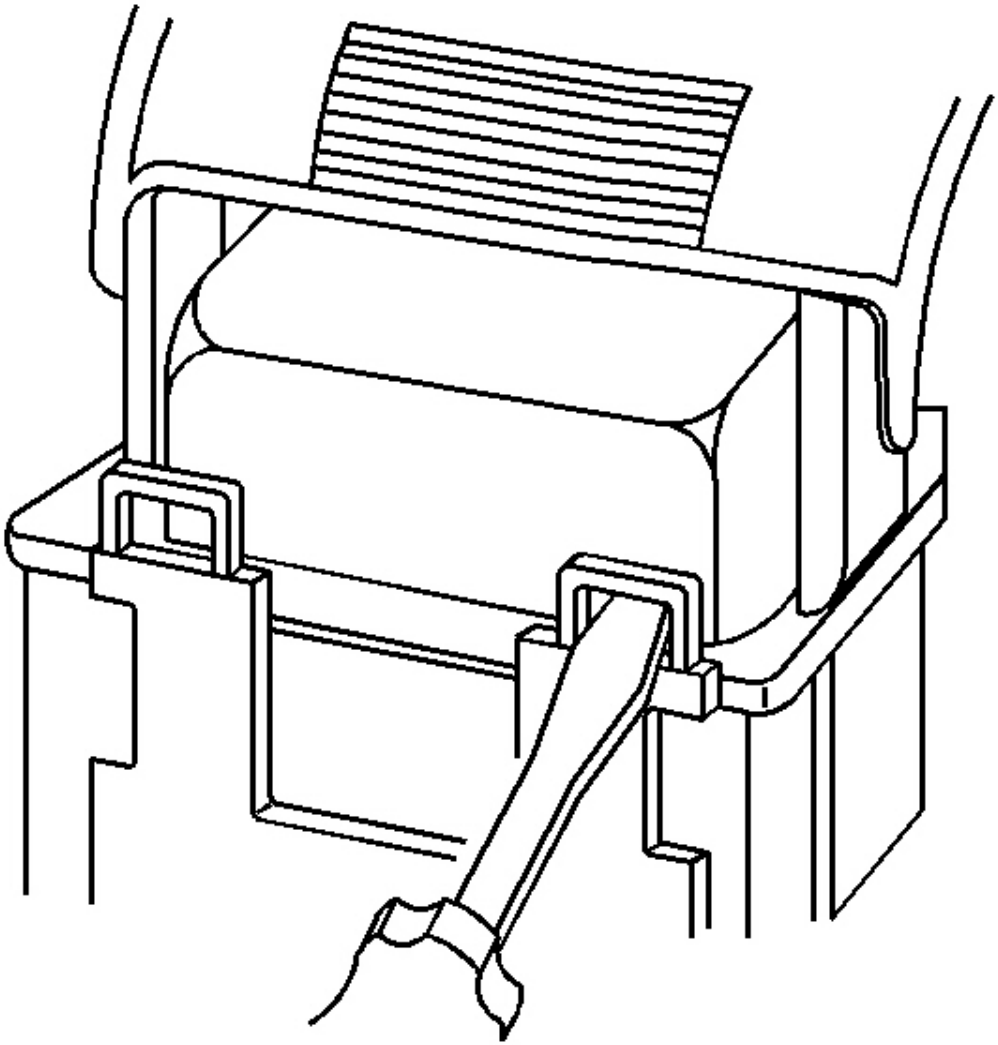

Fig. 30: Releasing Locking Tabs Terminal Identification
Courtesy of GENERAL MOTORS CORP.

3. Locate the dress cover locking tabs at the front of the connector. Using a small flat-blade tool push down on one of the locking tabs and pull the cover up until the dress cover releases. Repeat this procedure for the other locking tab.
4. Once the front 2 locks are unlocked, lift the front of the dress cover and pull it forward.

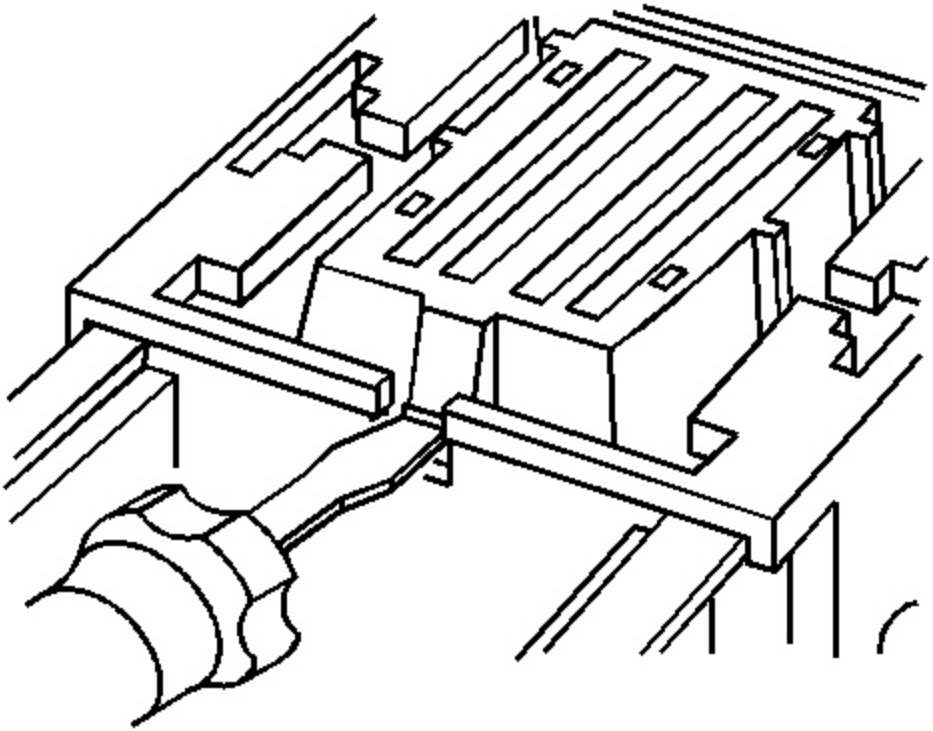

Fig. 31: Removing Nose Piece Terminal Identification
Courtesy of GENERAL MOTORS CORP.

5. If the connector has a nose piece, use a small flat-blade tool to remove the nose piece by inserting the blade into the slot on the front of the connector and prying up on the nose piece.

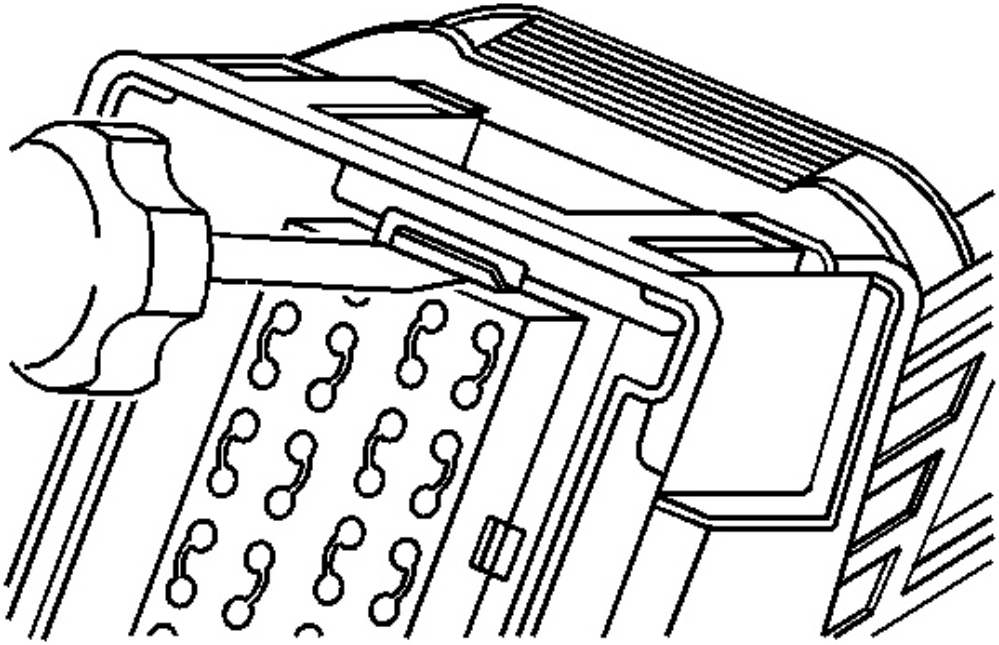

Fig. 32: Removing Terminal Position Assurance Terminal Identification
Courtesy of GENERAL MOTORS CORP.

IMPORTANT: Always use care when removing a terminal position assurance (TPA) in order to avoid damaging it.

6. Remove the TPA by inserting a small flat-blade tool into the small slot on the TPA and pushing down until the TPA releases. Gently pry the TPA out of the connector.

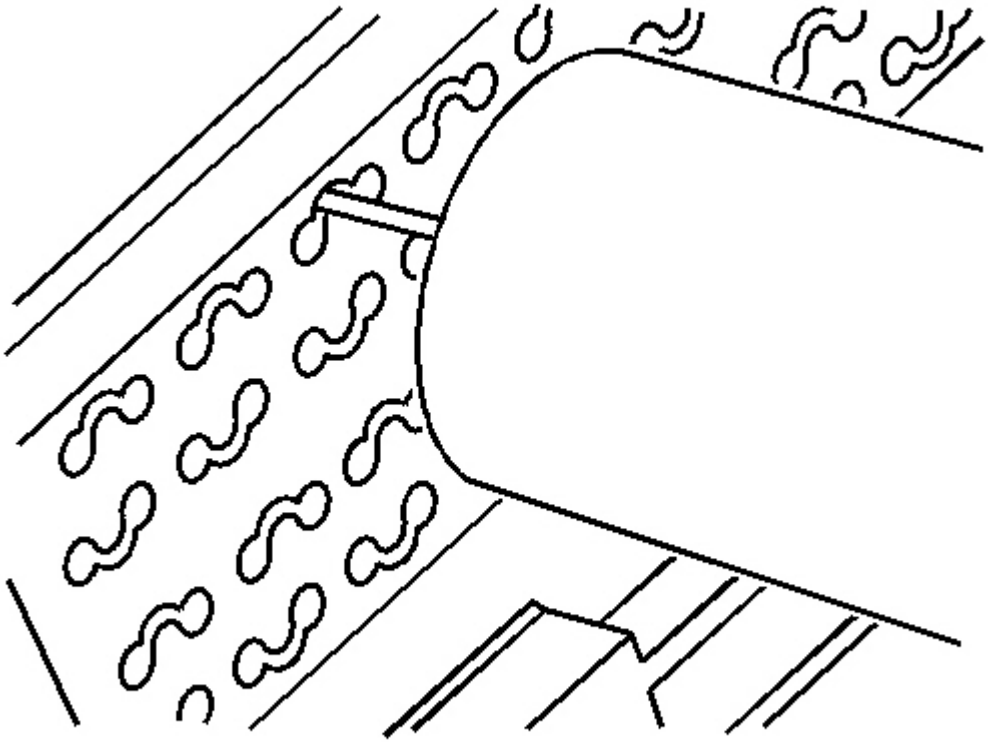

Fig. 33: Inserting J 38125-13A Into Terminal Cavities Canal Terminal Identification
Courtesy of GENERAL MOTORS CORP.

IMPORTANT: Be careful not to angle or rock the J 38125-13A tool when inserting it into the connector or the tool may break.

7. Insert the J 38125-13A (GM P/N 12031876-1) tool into the round canal between the terminals cavities at the front of the connector. See the release tool cross reference in the Reference Guide of the Terminal Repair Kit to ensure that the correct release tool is used.

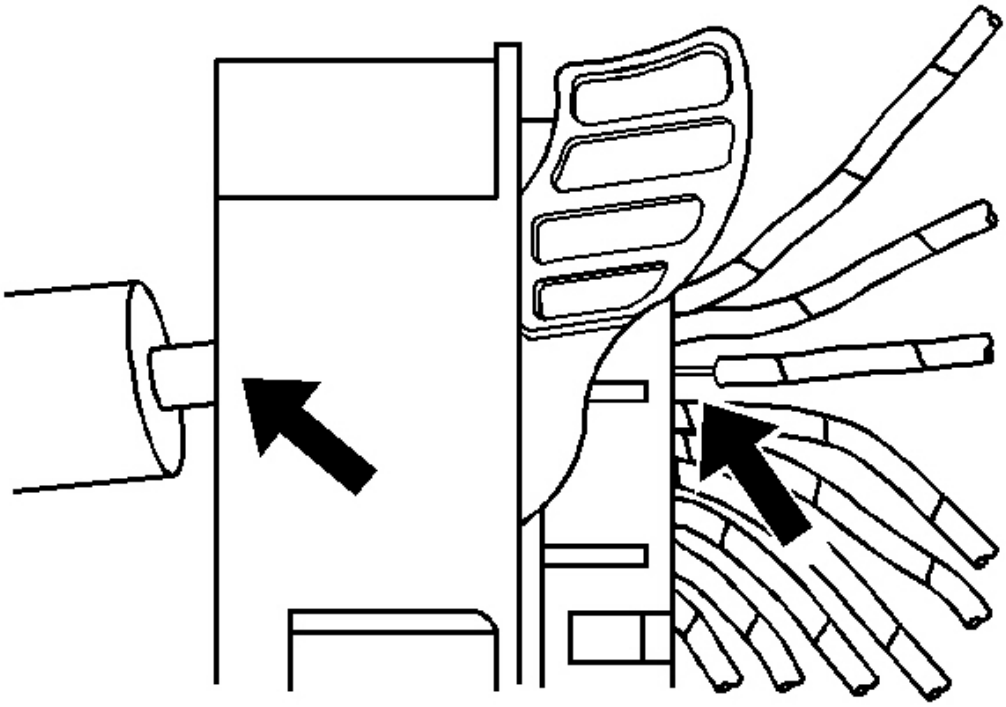

Fig. 34: Removing Wire From Back Of Connector Terminal Identification
Courtesy of GENERAL MOTORS CORP.

8. While holding the removal tool in place, gently pull the wire out of the back of the connector. Always remember never use force when pulling a terminal out of a connector.

Terminal Repair Procedure

Follow the steps below in order to repair Micro 64 connector terminals.

The Micro 64 connectors have small terminals that are difficult to handle and hold when crimping. In order to aid the technician when crimping these terminals, a new crimping tool was developed. The J 38125-64 (M jaw) was developed to crimp Micro 64 terminals. The J 38125-64 crimping tool has a terminal holding block that will hold the terminal in place while the terminal is being crimped. The J 38125-64 crimping tool is also designed to crimp both the wire and the insulation at the same time.

After the terminal is removed from the connector perform the following procedure in order to repair Micro 64 terminals.

IMPORTANT: After cutting the damaged terminal from the wire, determine if the remaining

wire is long enough to reach the connector without putting a strain on the wire. If the wire is not long enough, splice a small length of the same gage wire to the existing wire, then crimp the new terminal on the added wire.

1. Cut the wire as close to the damaged terminal as possible.
2. Strip 5 mm (3/16 in) of insulation from the wire.

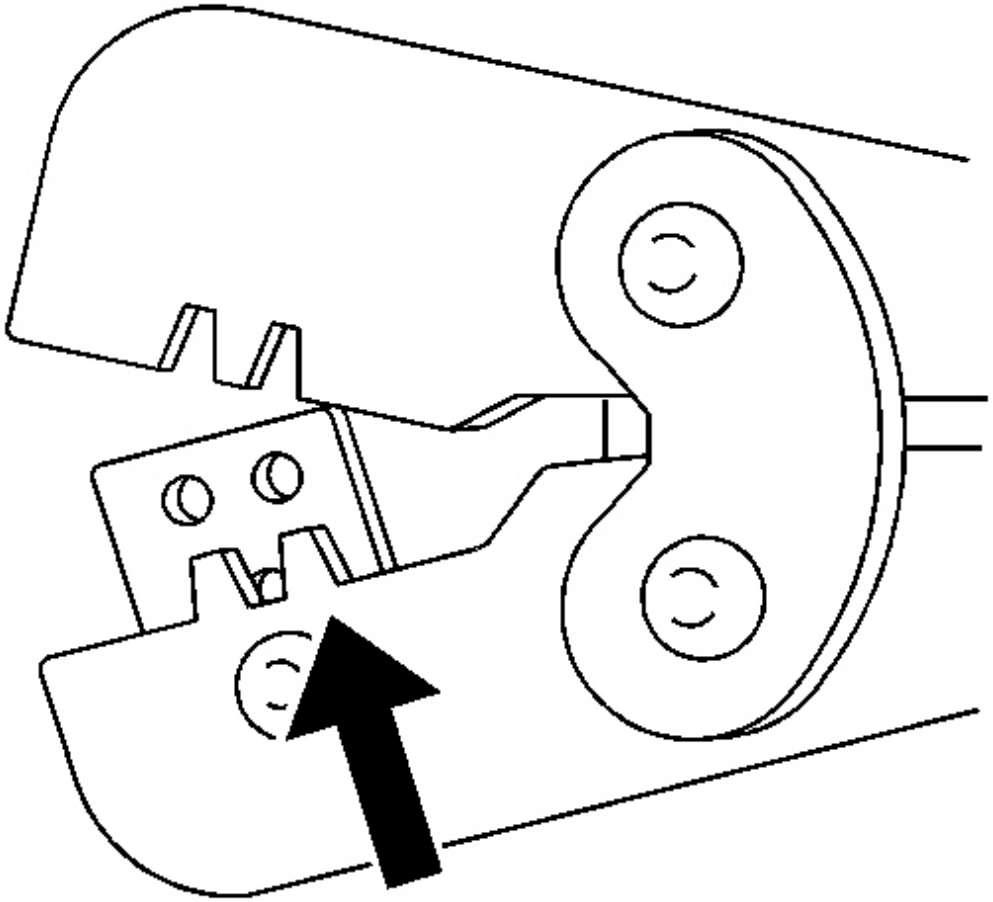

Fig. 35: Identifying Crimping Tool Spring Loaded Locator Terminal Identification
Courtesy of GENERAL MOTORS CORP.

3. Depress the spring loaded locator of the crimping tool until the terminal holder is completely visible.

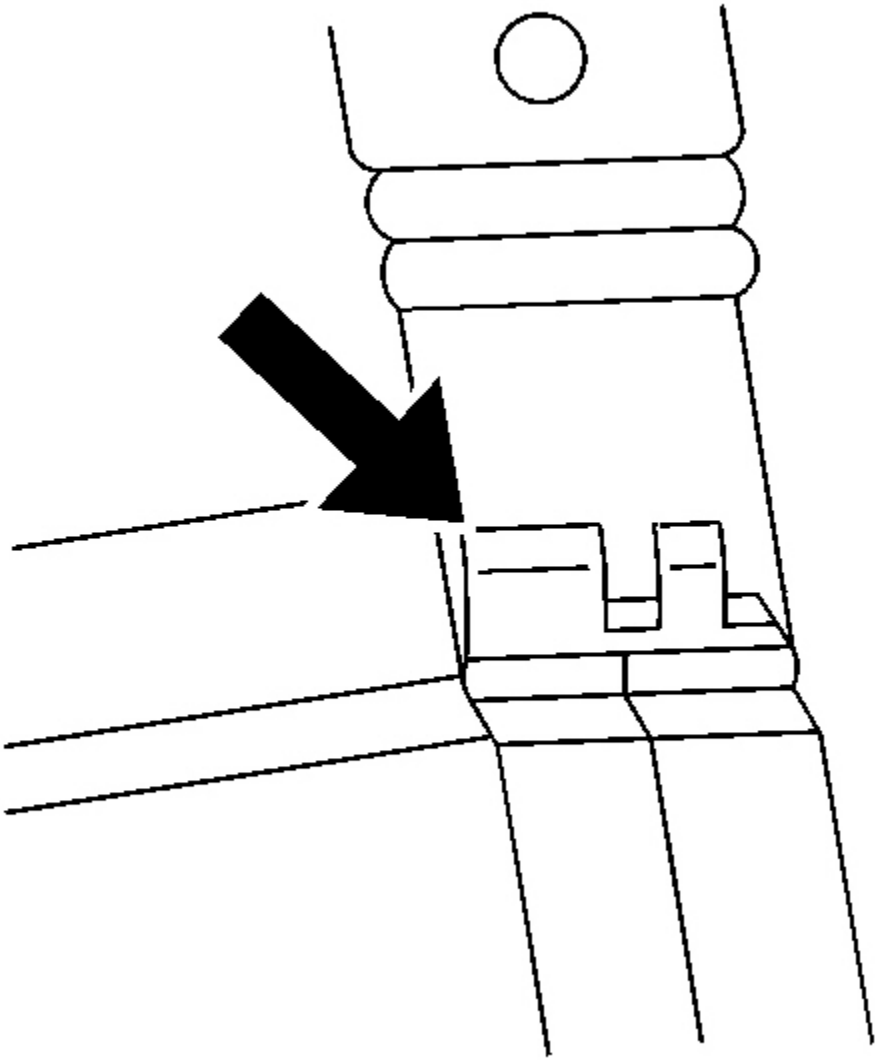

Fig. 36: Inserting Terminal Into Terminal Holder Terminal Identification
Courtesy of GENERAL MOTORS CORP.

4. Insert terminal into the appropriate terminal holder until it hits bottom and stops. The correct terminal holder is determined by the wire size. Also ensure that the terminals wings are pointing towards the former on the tool and the release locator.
5. Insert the stripped cable into the terminal. Insulation should be visible on both sides of the terminal insulation wings.
6. Compress the handles until the ratchet automatically releases.

7. Place the terminal into the appropriate cavity and assemble the connector.

WEATHER PACK CONNECTORS

The following is the proper procedure for the repair of Weather Pack(R) Connectors.

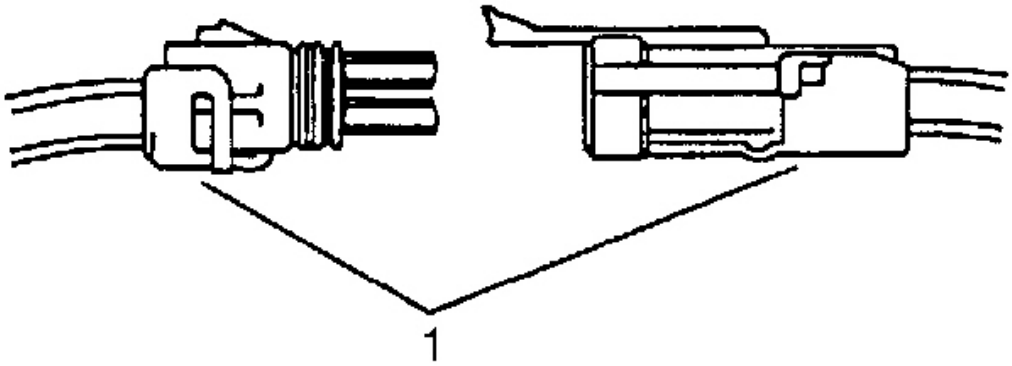

Fig. 37: Separating Weather Pack Connector Halves Terminal Identification
Courtesy of GENERAL MOTORS CORP.

1. Separate the connector halves (1).
2. Open the secondary lock. A secondary lock aids in terminal retention and is usually molded to the connector (1).
3. Grasp the wire and push the terminal to the forward most position. Hold the wire in this position.

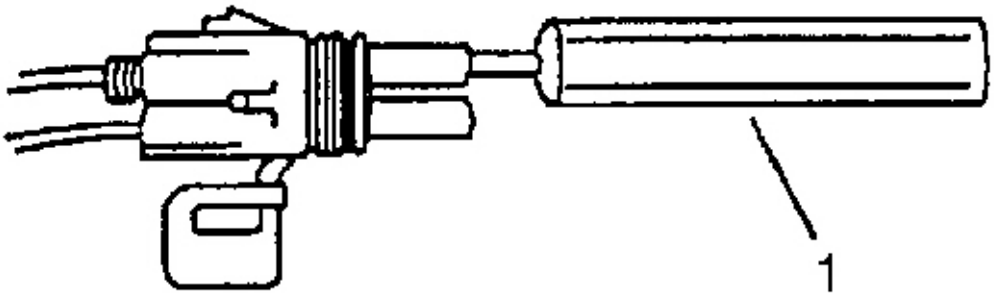

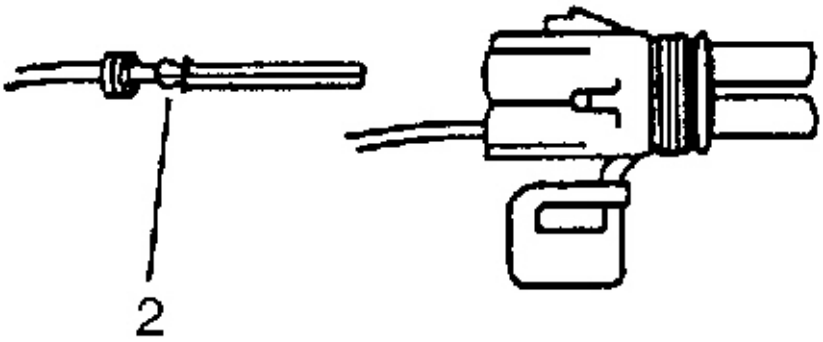

Fig. 38: Removing Cable & Terminal From Connector Terminal Identification
Courtesy of GENERAL MOTORS CORP.

4. Insert the Weather Pack(R) terminal removal tool into the front (mating end) of the connector cavity until it rests on the cavity shoulder (1).
5. Gently pull on the wire to remove the terminal through the back of the connector (2).

IMPORTANT: Never use force to remove a terminal from a connector.

6. Inspect the terminal and connector for damage. Repair as necessary. Refer to **Repairing Connector Terminals** .
7. Reform the lock tang (2) and reset terminal in connector body.
8. Close secondary locks and join connector halves.

9. Verify that circuit is complete and working satisfactorily.
10. Perform system check.

REPAIRING CONNECTOR TERMINALS

Tools Required

J-38125 Terminal Repair Kit. See **Special Tools and Equipment** .

Use the following repair procedures in order to repair the following:

- Push to Seat terminals
- Pull to Seat terminals

Some terminals do not require all of the steps shown. Skip the steps that do not apply for your terminal repair. The **J-38125** contains further information. See **Special Tools and Equipment** .

1. Cut off the terminal between the core and the insulation crimp. Minimize any wire loss.

   For cable seal terminals, remove the seal.

2. Apply the correct cable seal per gage size of the wire, if used.

   Slide the seal back along the wire in order to enable insulation removal.

3. Remove the insulation.
4. For sealed terminals only, align the seal with the end of the cable insulation.
5. Position the strip in the terminal.

   For sealed terminals, position the strip and seal in the terminal.

6. Hand crimp the core wings.
7. Hand crimp the insulation wings.

   For sealed terminals, hand crimp the insulation wings around the seal and the cable.

8. Solder all of the hand crimp terminals excepting Micro-Pack 100 .64 size. Soldering Micro-Pack 100 World terminals may damage the terminal.

SCHEMATIC AND ROUTING DIAGRAMS

POWER AND GROUNDING SCHEMATIC ICONS

Power and Grounding Schematic Icons

Icon	Icon Definition
	Resistance wire with a stainless steel core. Approximately 6.6 ohm of resistance per meter (21.7 Feet).
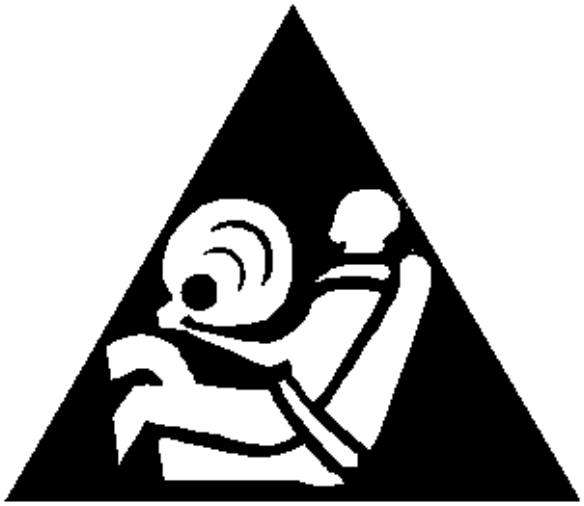	**CAUTION:** **When performing service on or near the SIR components or the SIR wiring, the SIR system must be disabled. Refer to SIR Disabling and Enabling Zones. Failure to observe the correct procedure could cause deployment of the SIR components, personal injury, or unnecessary SIR system repairs.**

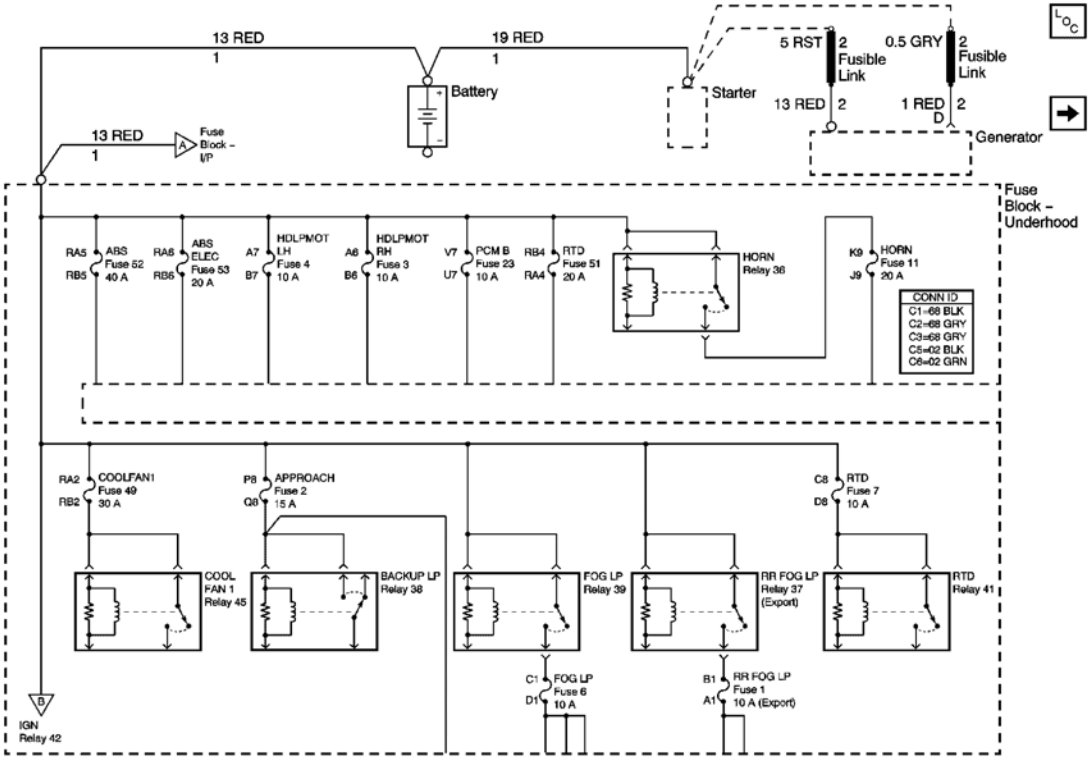

Fig. 39: Fuse Block Schematic - Underhood Bussing (1 of 2)
Courtesy of GENERAL MOTORS CORP.

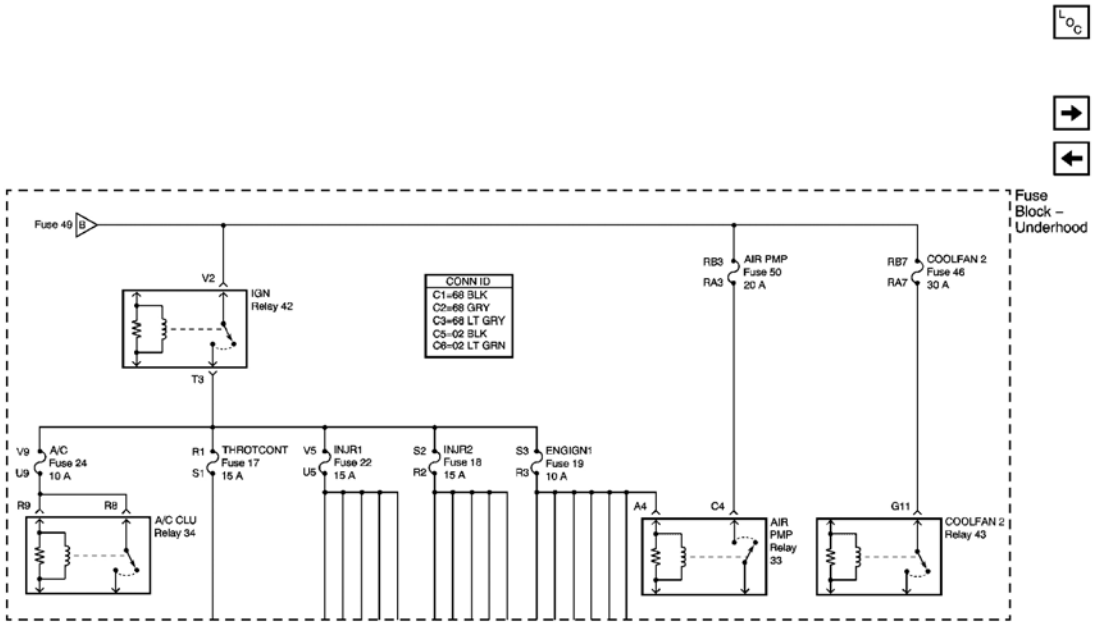

Fig. 40: Fuse Block Schematic - Underhood Bussing (2 of 2)
Courtesy of GENERAL MOTORS CORP.

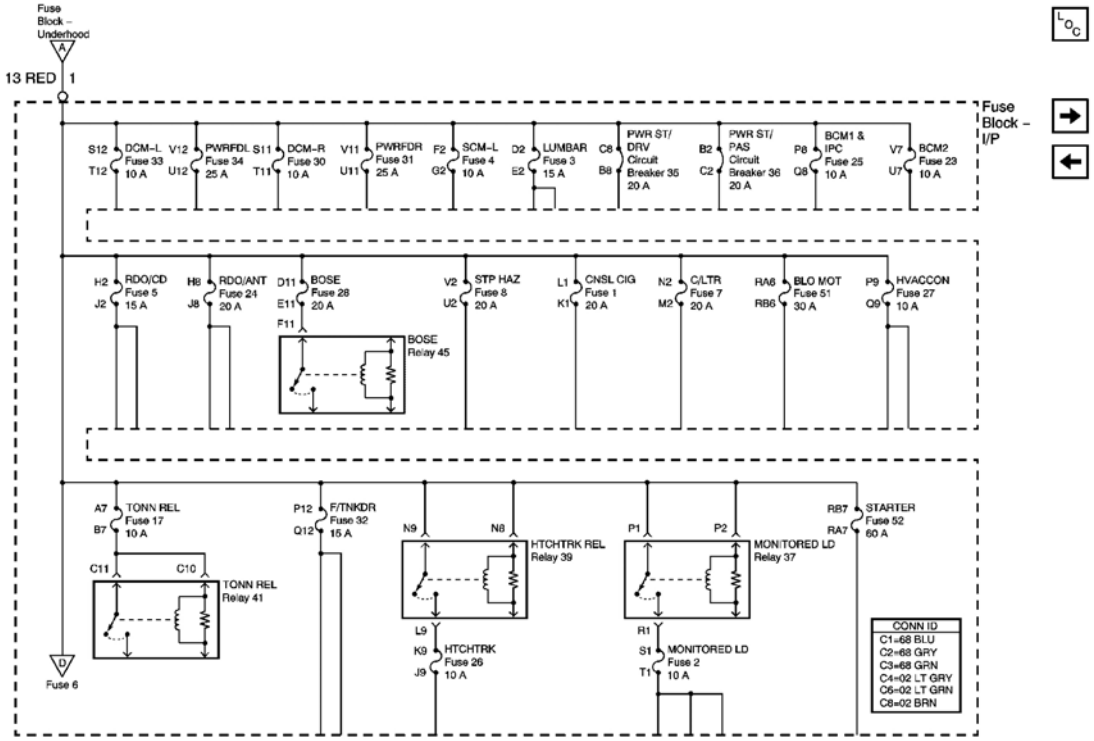

Fig. 41: Fuse Block Schematic - I/P Bussing (1 of 2)

Courtesy of GENERAL MOTORS CORP.

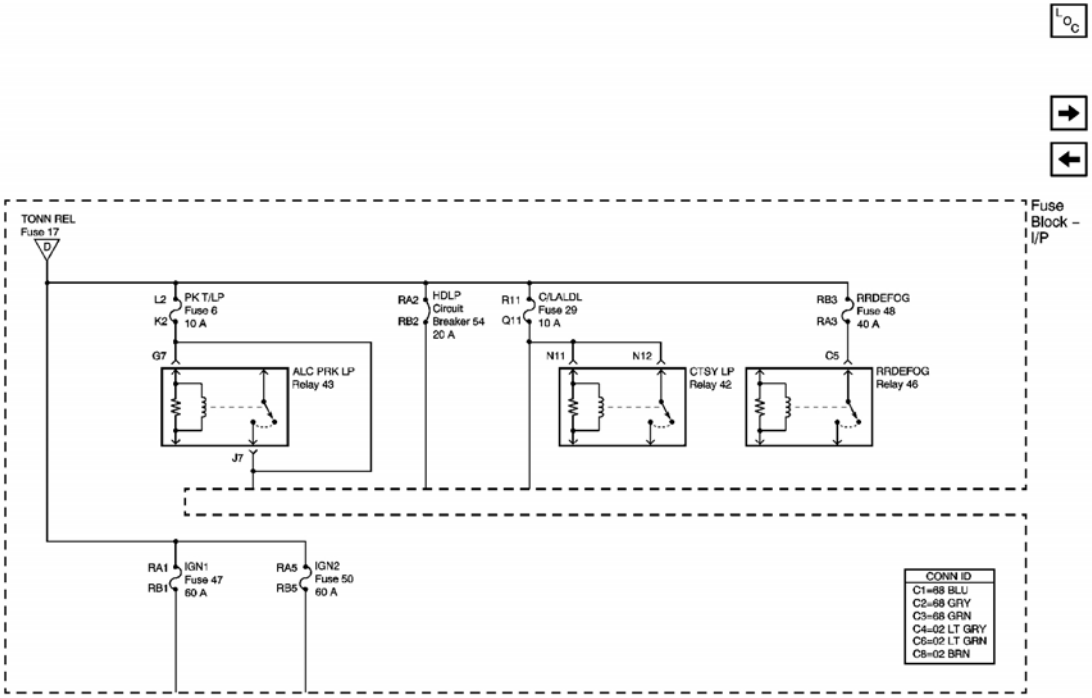

Fig. 42: Fuse Block Schematic - I/P Bussing (2 of 2)
Courtesy of GENERAL MOTORS CORP.

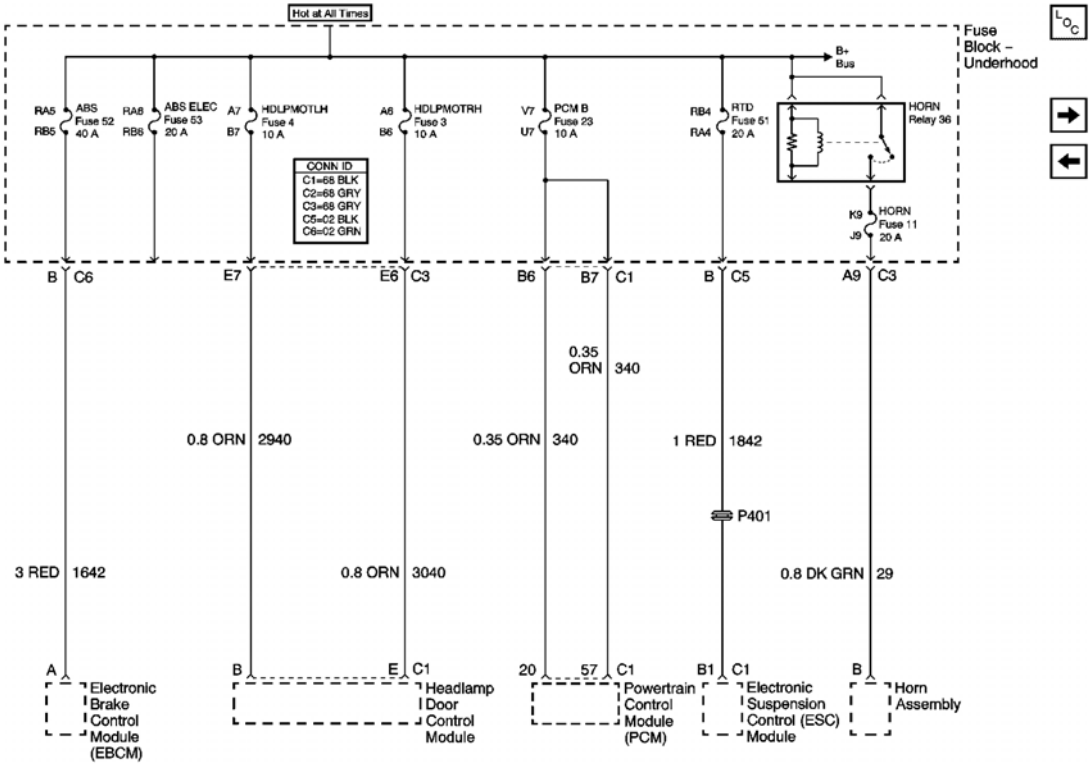

Fig. 43: Fuse Block Schematic - Underhood Fuses 52, 53, 4, 3, 23, 51, 11 And Relay 36
Courtesy of GENERAL MOTORS CORP.

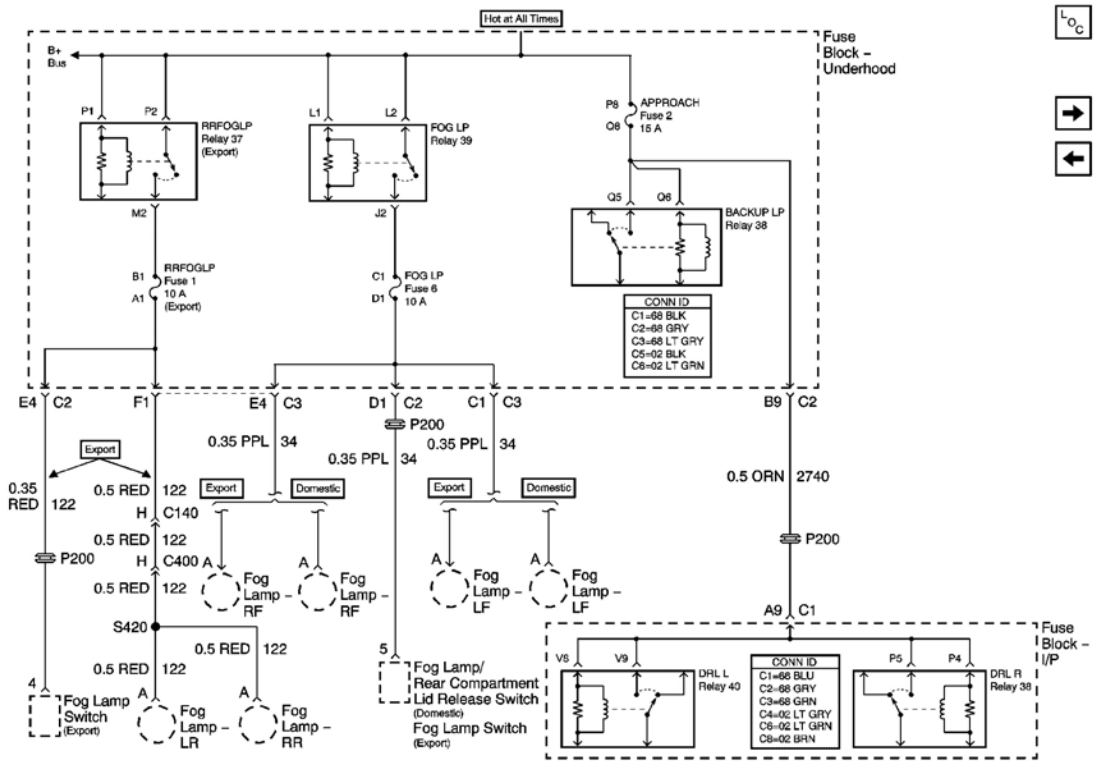

Fig. 44: Fuse Block Schematic - Underhood Fuses 1, 6, 2 And Relays 37, 39, 38 And Instrument Panel Electrical Center Relays 40 And 38
Courtesy of GENERAL MOTORS CORP.

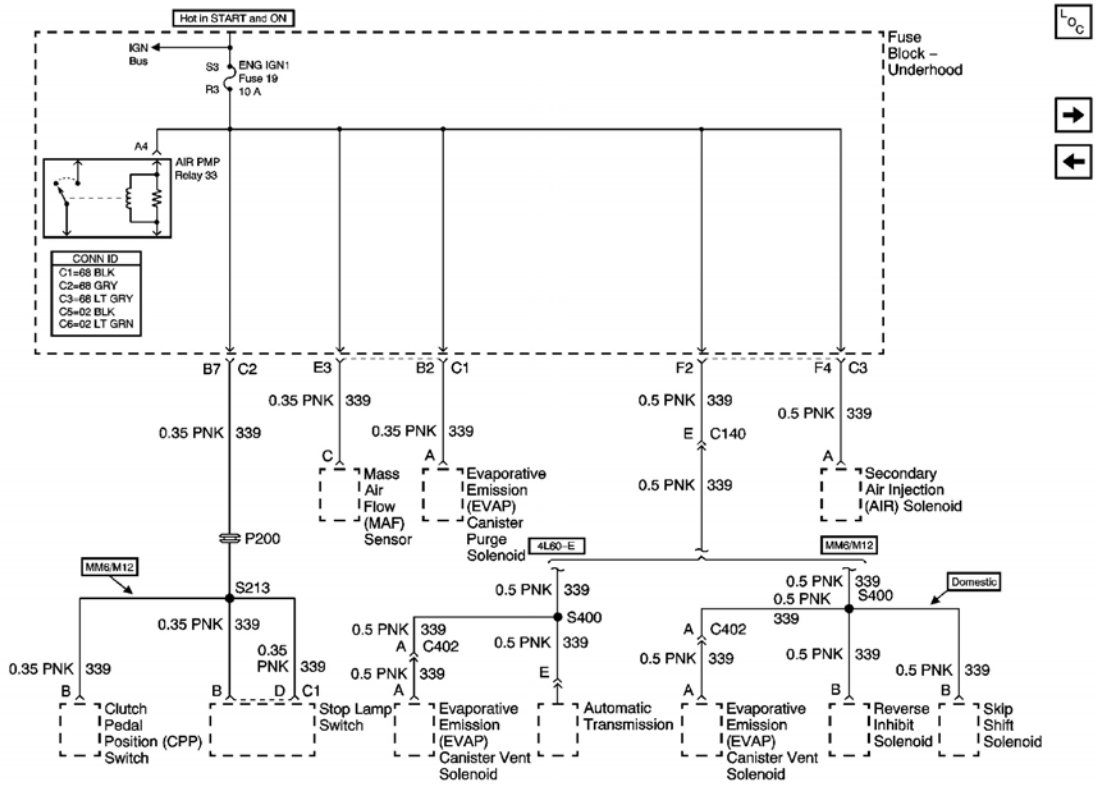

Fig. 45: Fuse Block Schematic - Underhood Fuse 19 And Relay 33
Courtesy of GENERAL MOTORS CORP.

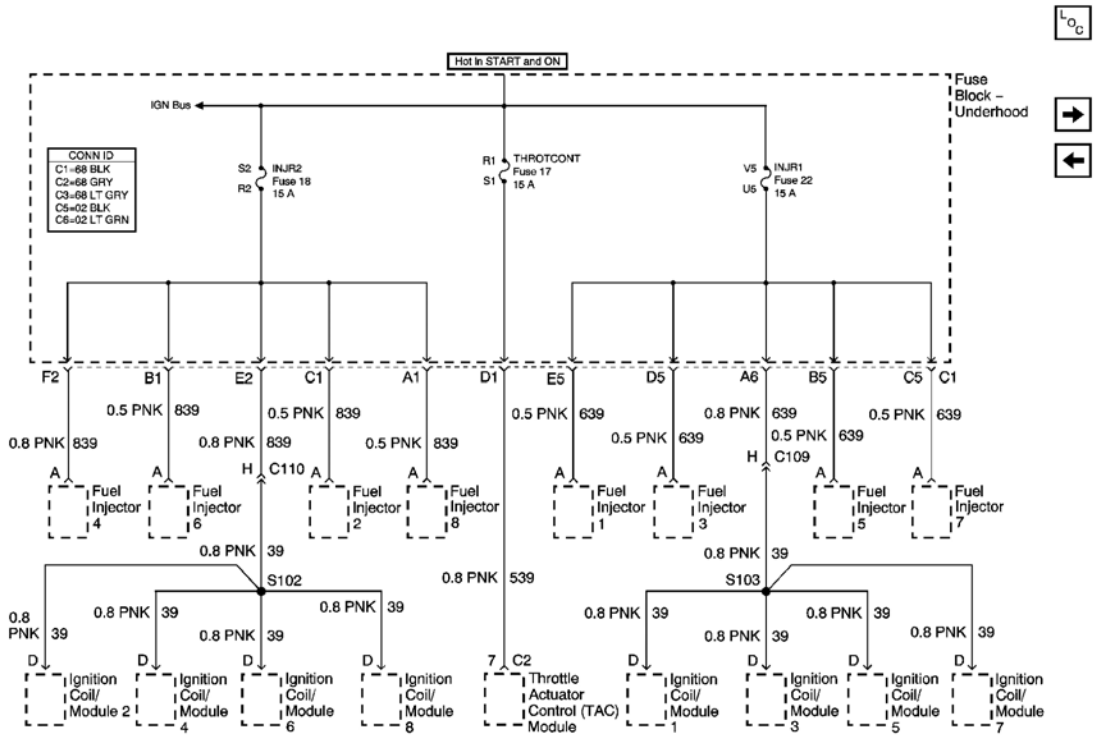

Fig. 46: Fuse Block Schematic - Underhood Fuses 18, 17 And 22
Courtesy of GENERAL MOTORS CORP.

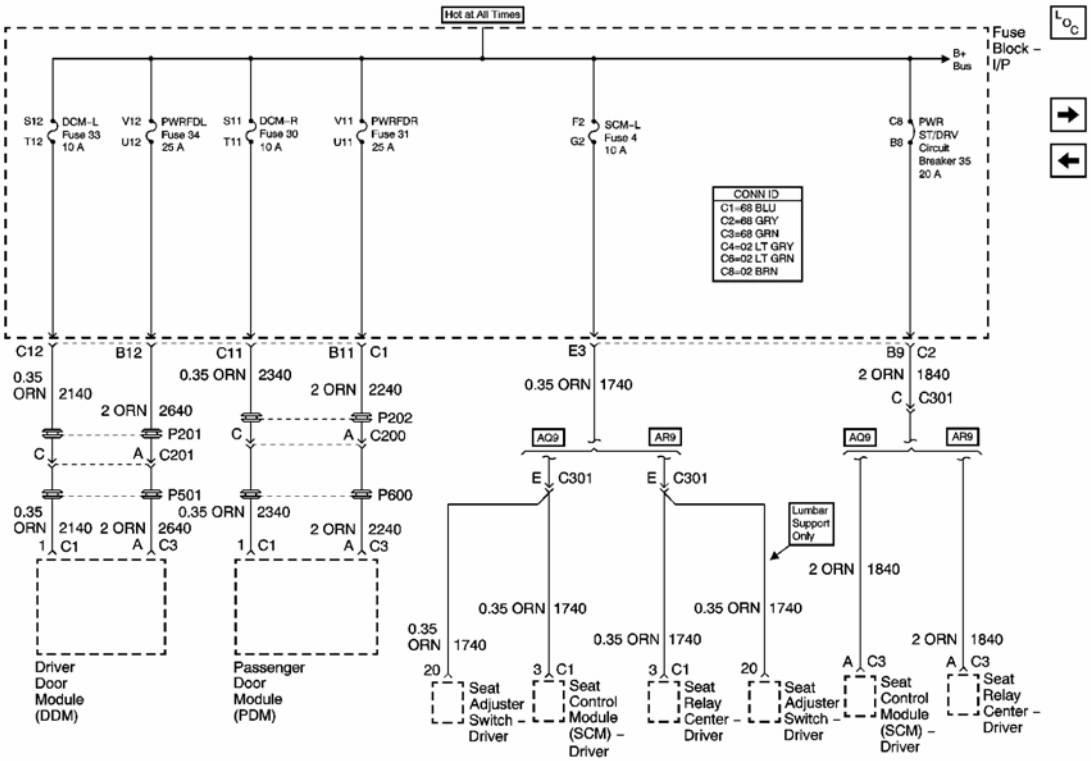

Fig. 47: Fuse Block Schematic - I/P Fuses 33, 34, 30, 31, 4 And Circuit Breaker 35
Courtesy of GENERAL MOTORS CORP.

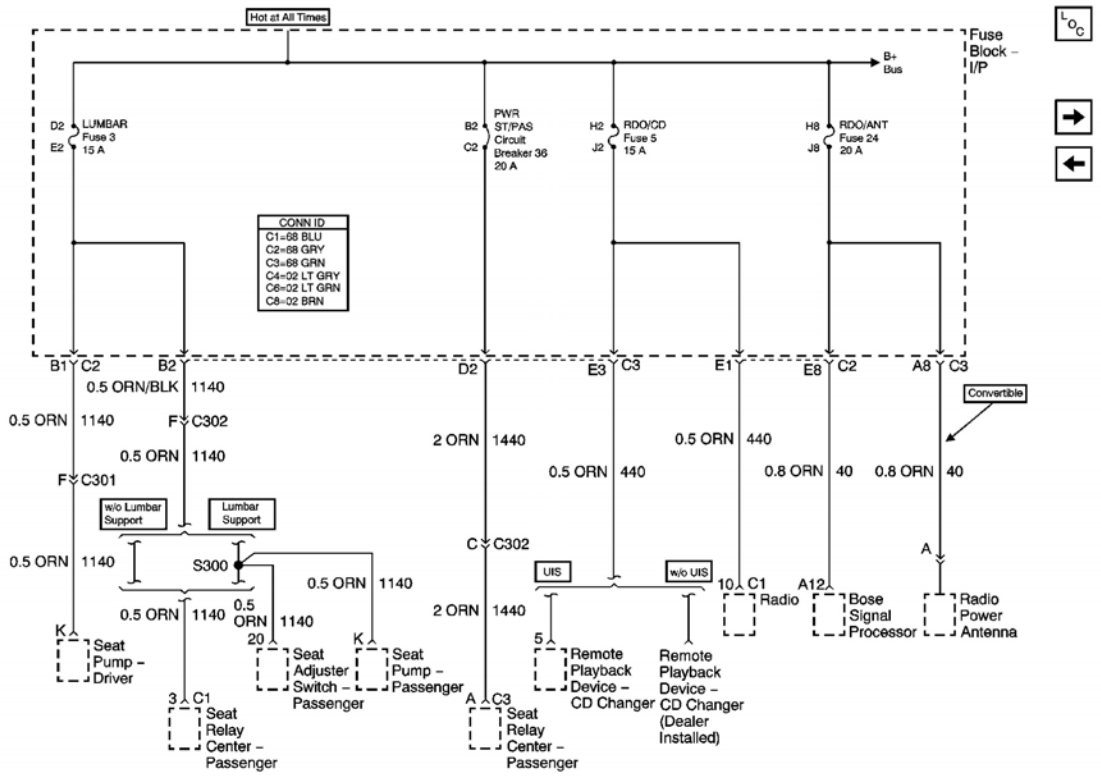

Fig. 48: Fuse Block Schematic - I/P Fuses 3, 5, 24 And Circuit Breaker 36
Courtesy of GENERAL MOTORS CORP.

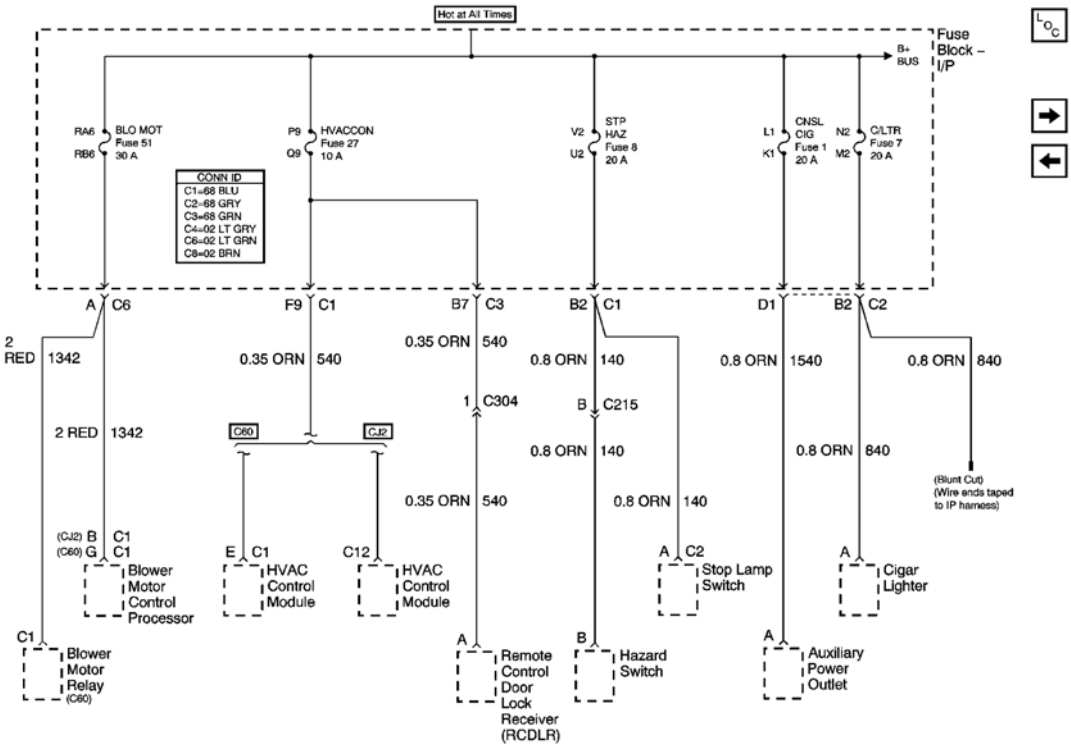

Fig. 49: Fuse Block Schematic - I/P Fuses 51, 27, 8, 1 And 7
Courtesy of GENERAL MOTORS CORP.

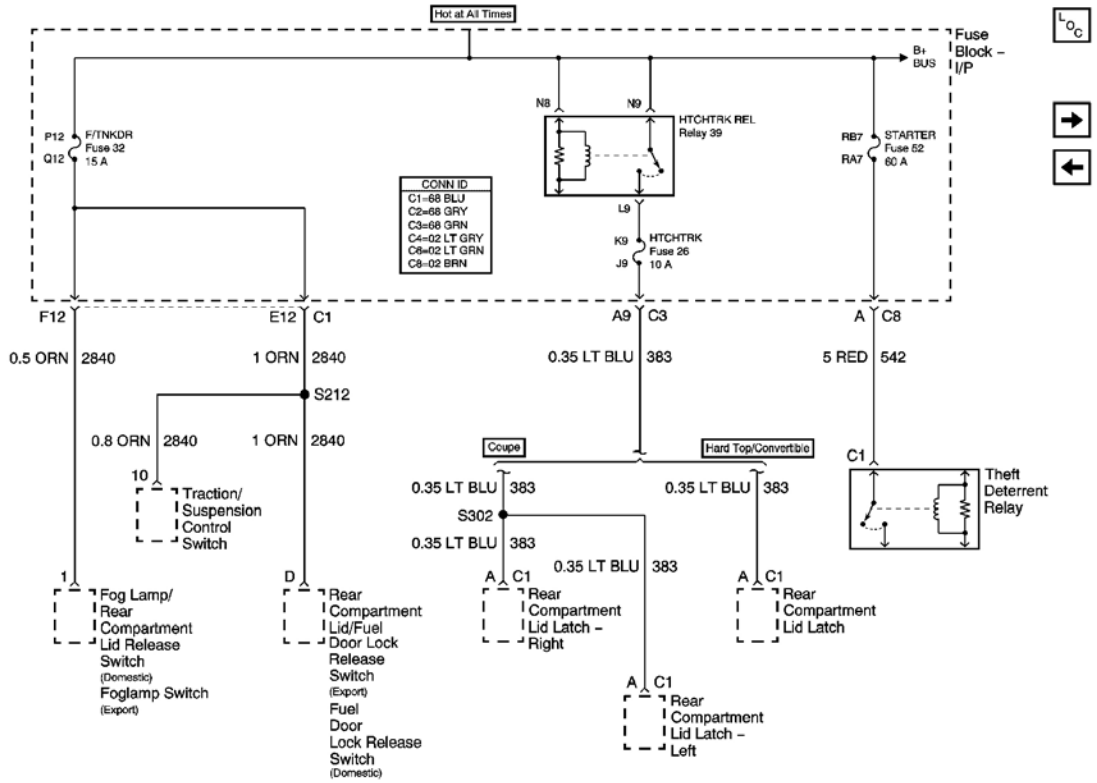

Fig. 50: Fuse Block Schematic - I/P Fuses 32, 26, 52 And Relay 39
Courtesy of GENERAL MOTORS CORP.

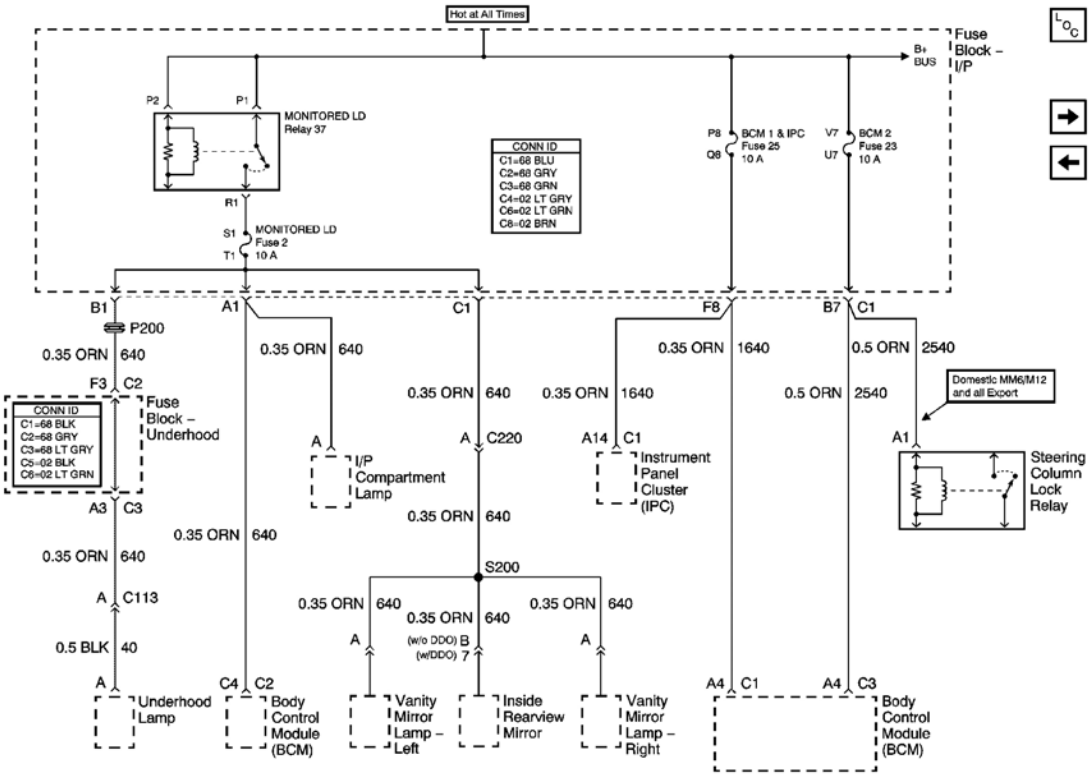

Fig. 51: Fuse Block Schematic - I/P Fuses 2, 25, 23 And Relay 37
Courtesy of GENERAL MOTORS CORP.

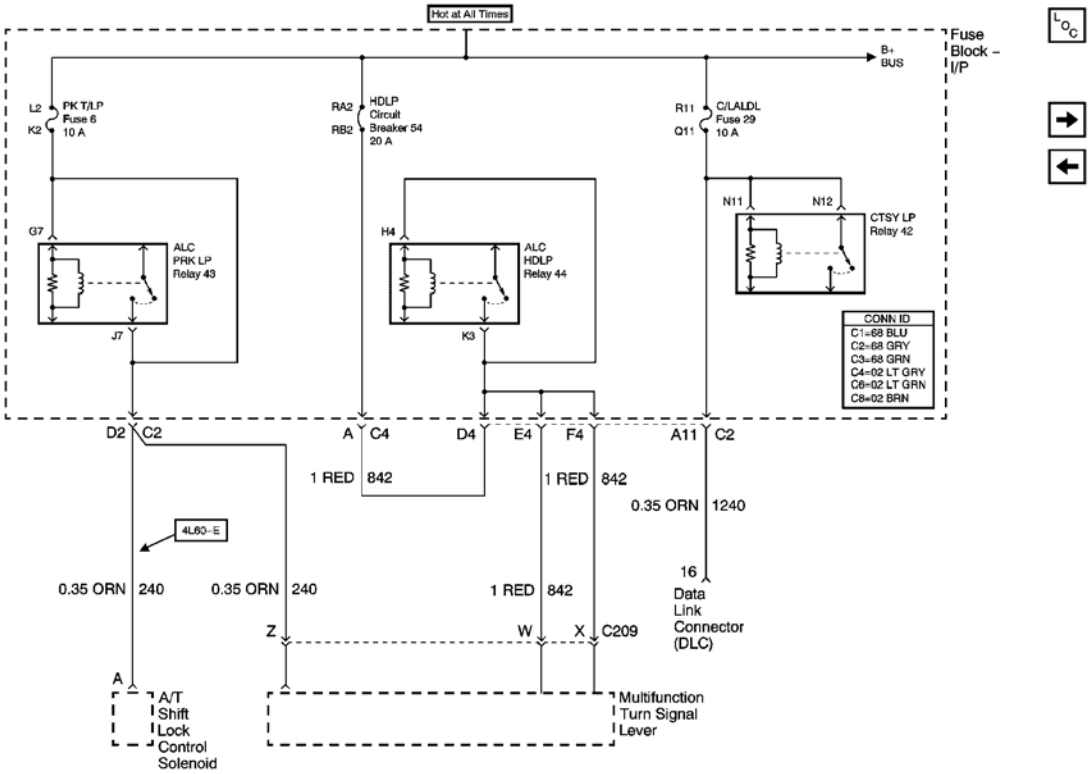

Fig. 52: Fuse Block Schematic - I/P Fuses 6, 29, Circuit Breaker 54, Relays 43, 44 And 42
Courtesy of GENERAL MOTORS CORP.

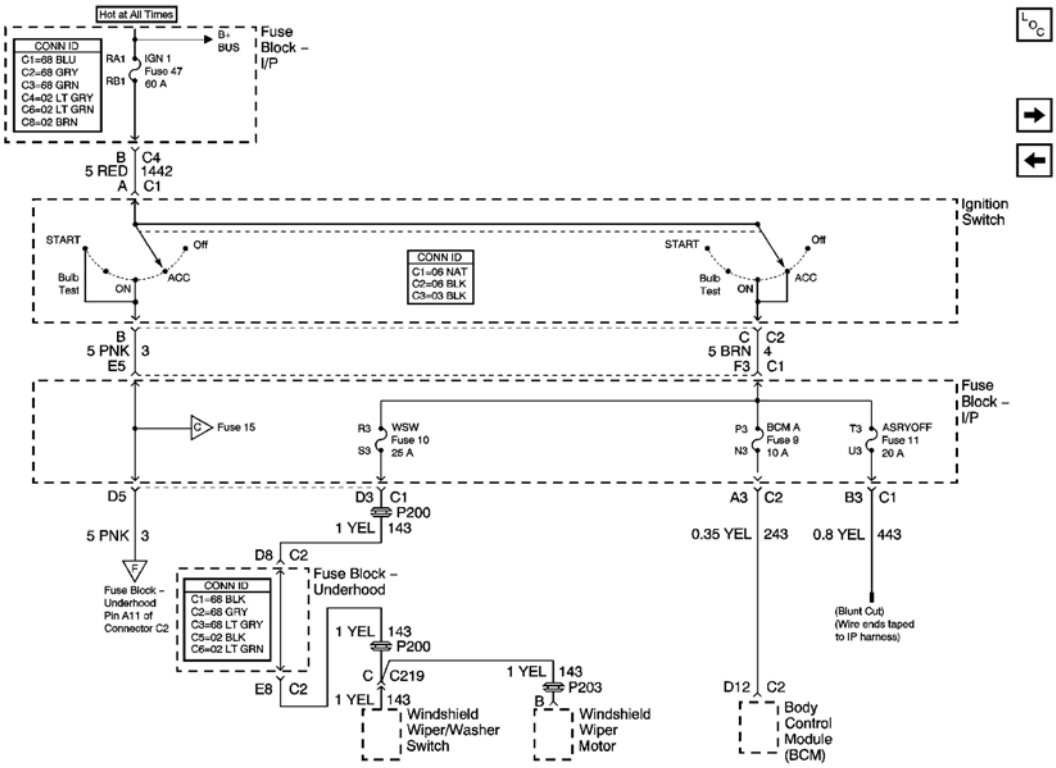

Fig. 53: Fuse Block Schematic - I/P Fuses 47, 10, 9, And 11
Courtesy of GENERAL MOTORS CORP.

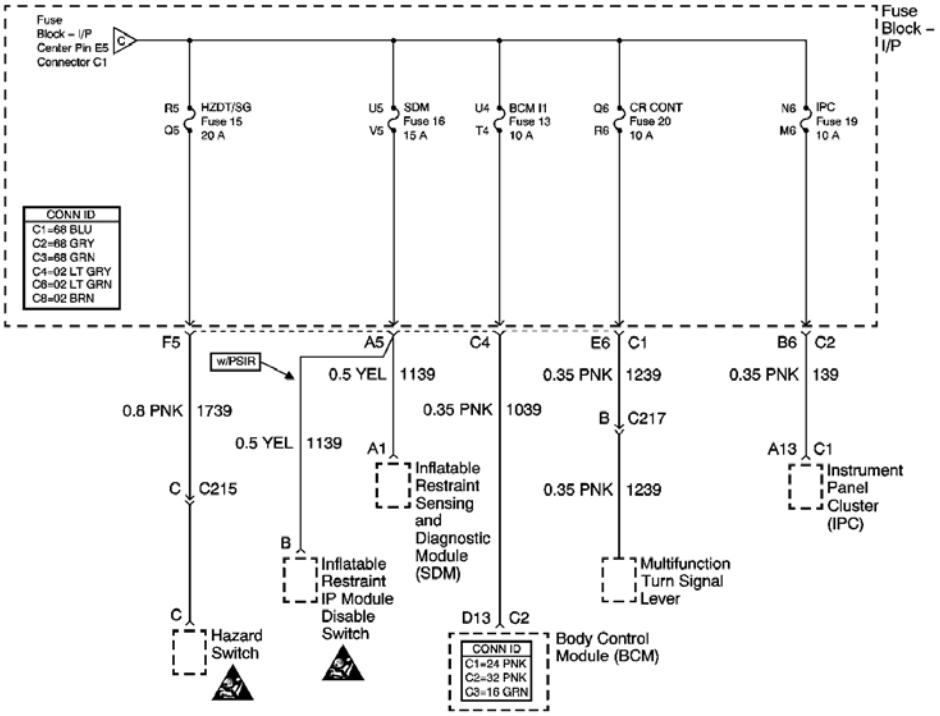

Fig. 54: Fuse Block Schematic - I/P Fuses 15, 16, 13, 20 And 19
Courtesy of GENERAL MOTORS CORP.

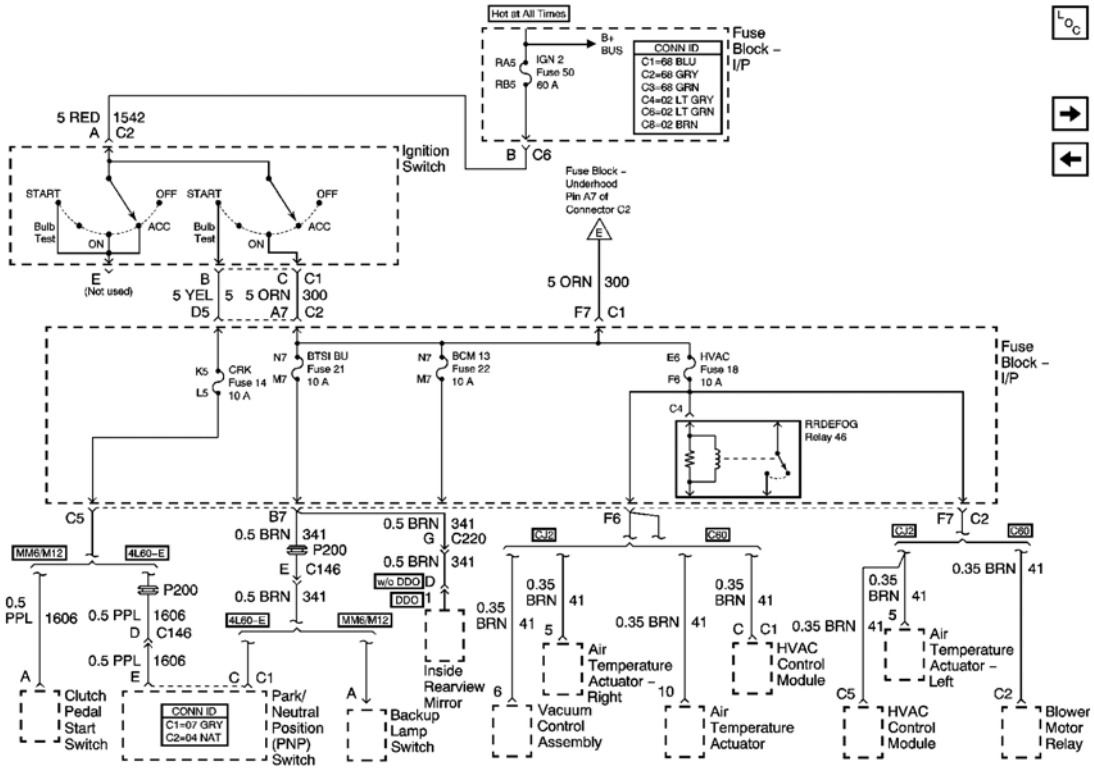

Fig. 55: Fuse Block Schematic - I/P Fuses 50, 14, 21, 22, 18 And Relay 44
Courtesy of GENERAL MOTORS CORP.

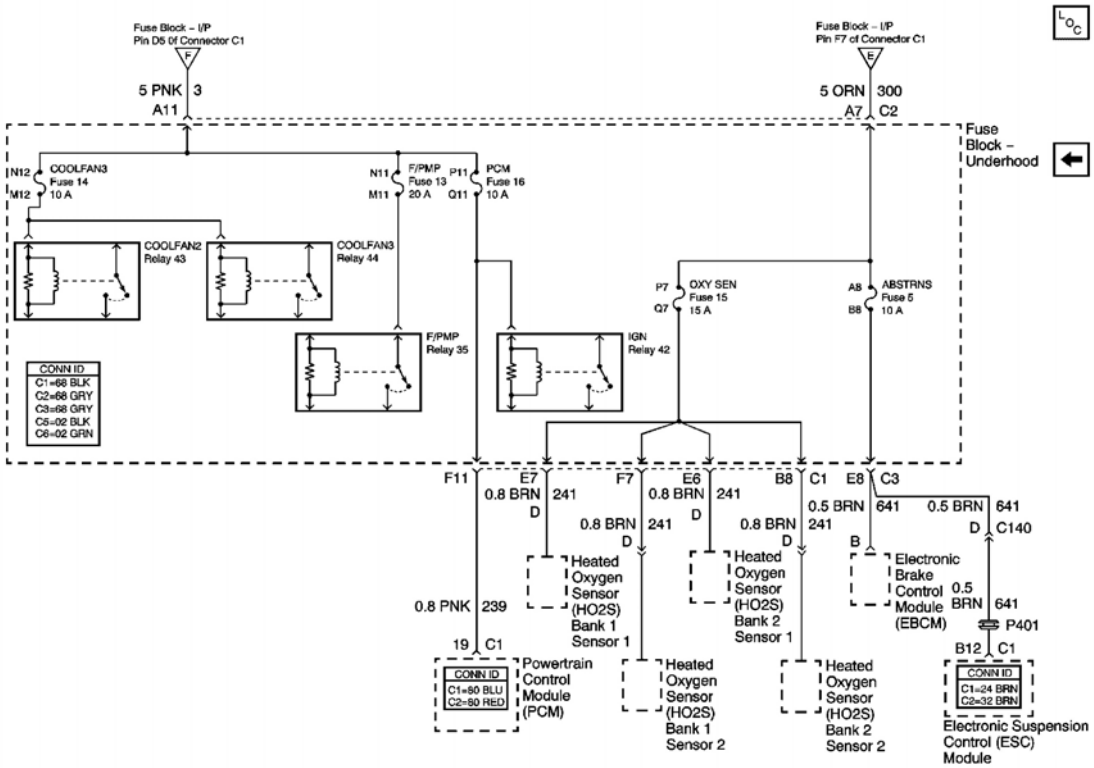

Fig. 56: Fuse Block Schematic - Underhood Fuses 14, 13, 16, 15, 5 And Relays 43, 44, 35 And 42
Courtesy of GENERAL MOTORS CORP.

GROUND DISTRIBUTION SCHEMATICS

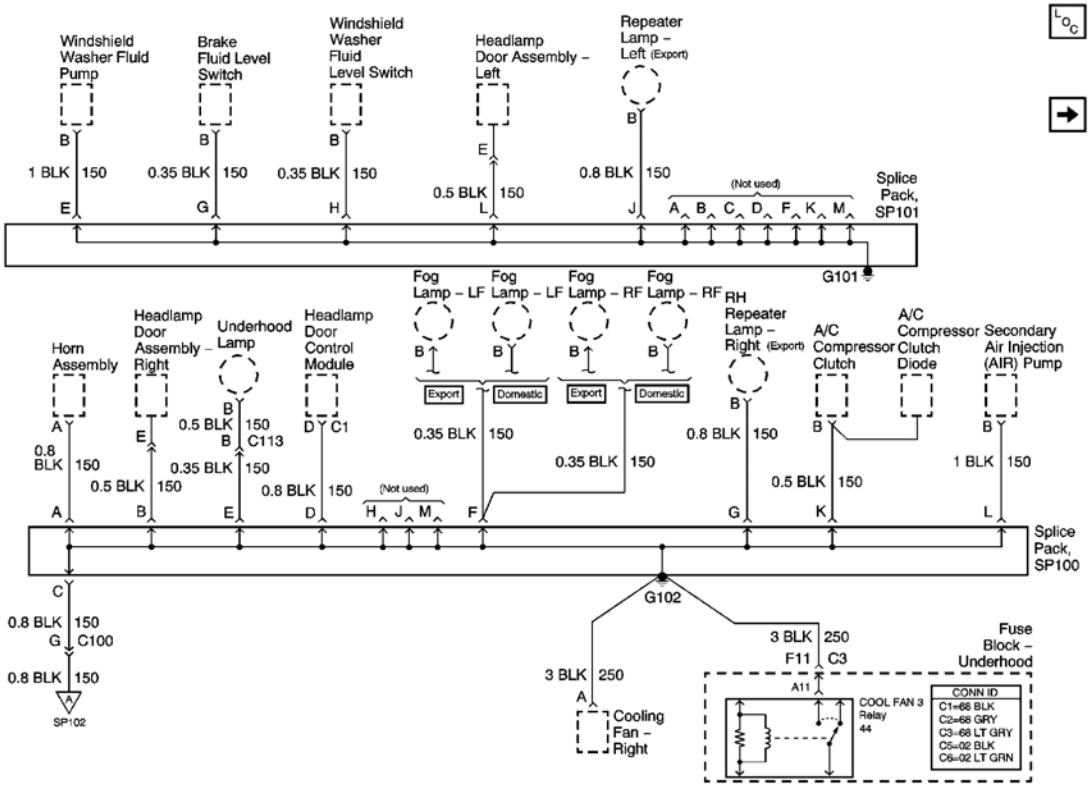

Fig. 57: G101 And G102 Schematic
Courtesy of GENERAL MOTORS CORP.

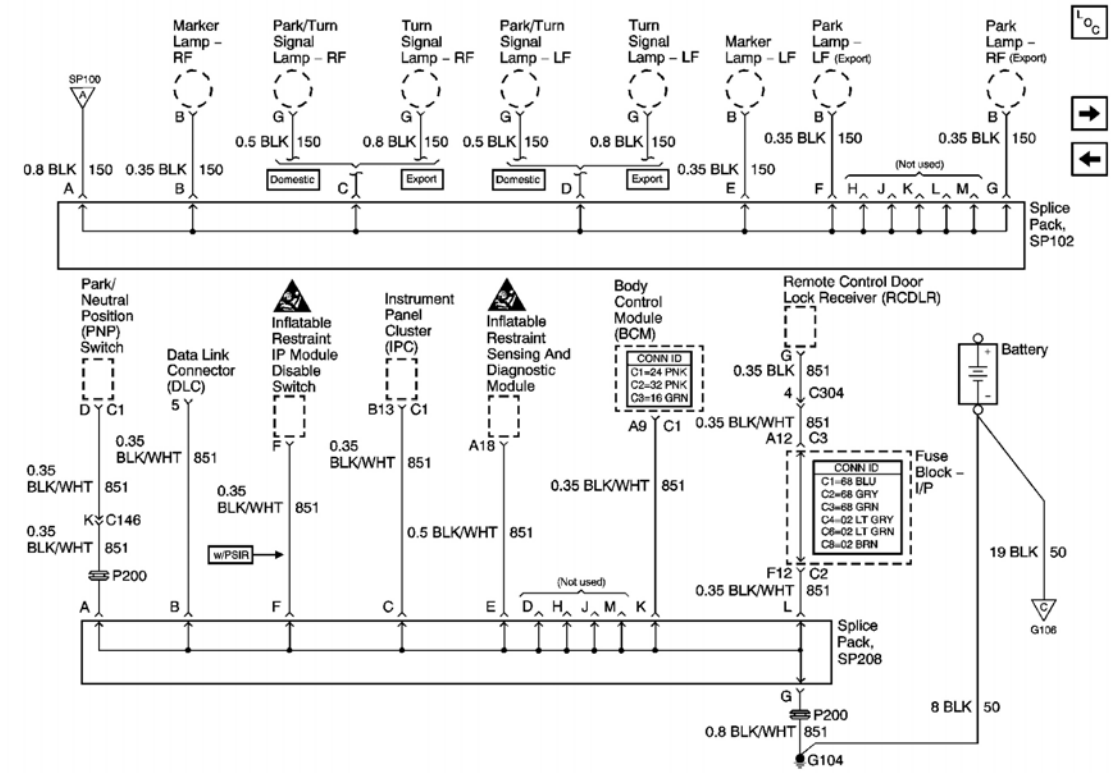

Fig. 58: G104 Schematic
Courtesy of GENERAL MOTORS CORP.

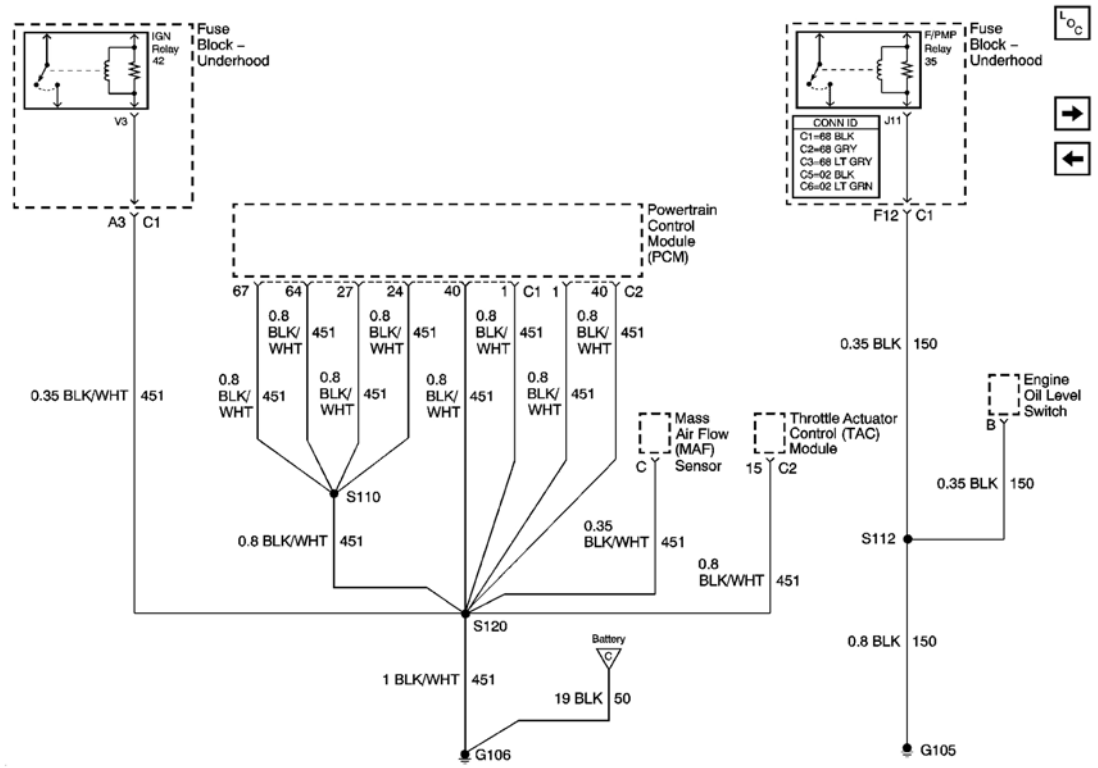

Fig. 59: G106 And G105 Schematic
Courtesy of GENERAL MOTORS CORP.

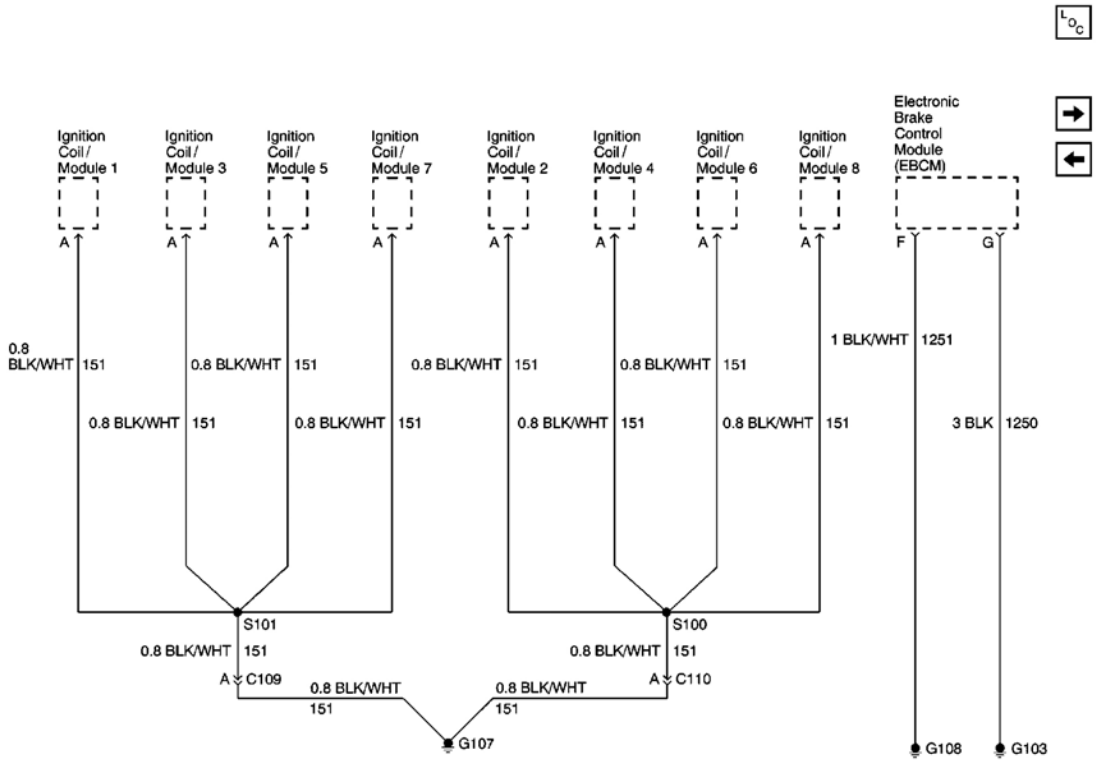

Fig. 60: G107, G108 And G103 Schematic
Courtesy of GENERAL MOTORS CORP.

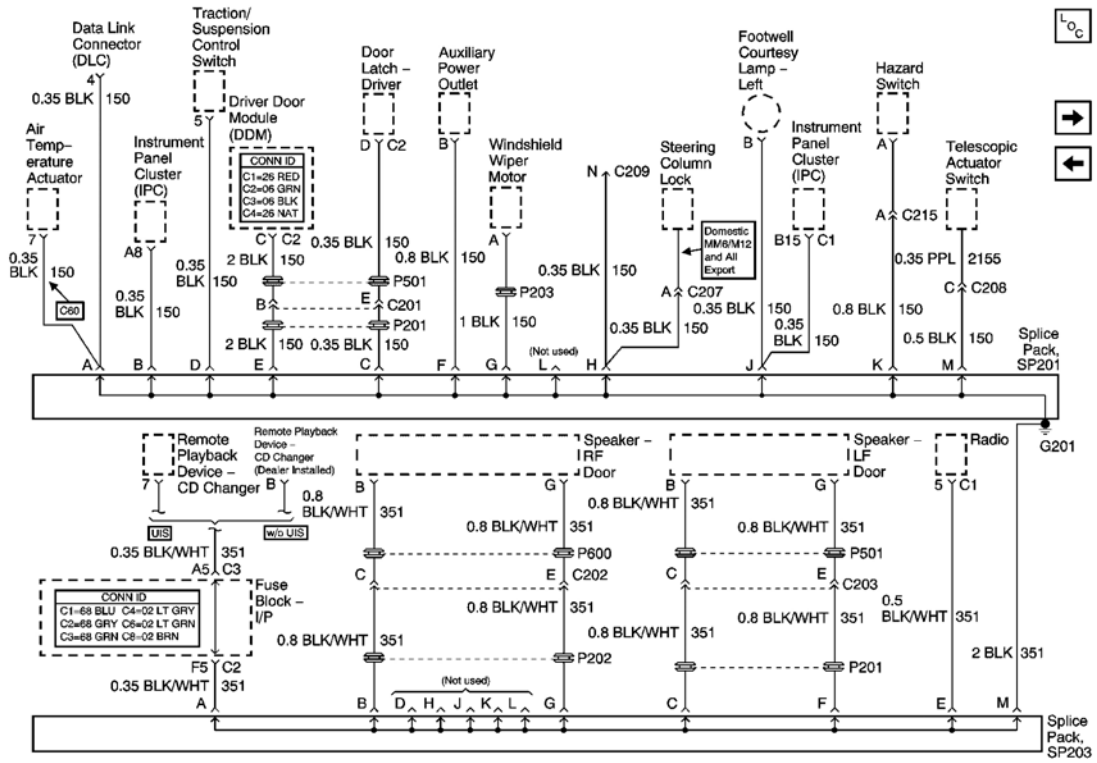

Fig. 61: G201 Schematic
Courtesy of GENERAL MOTORS CORP.

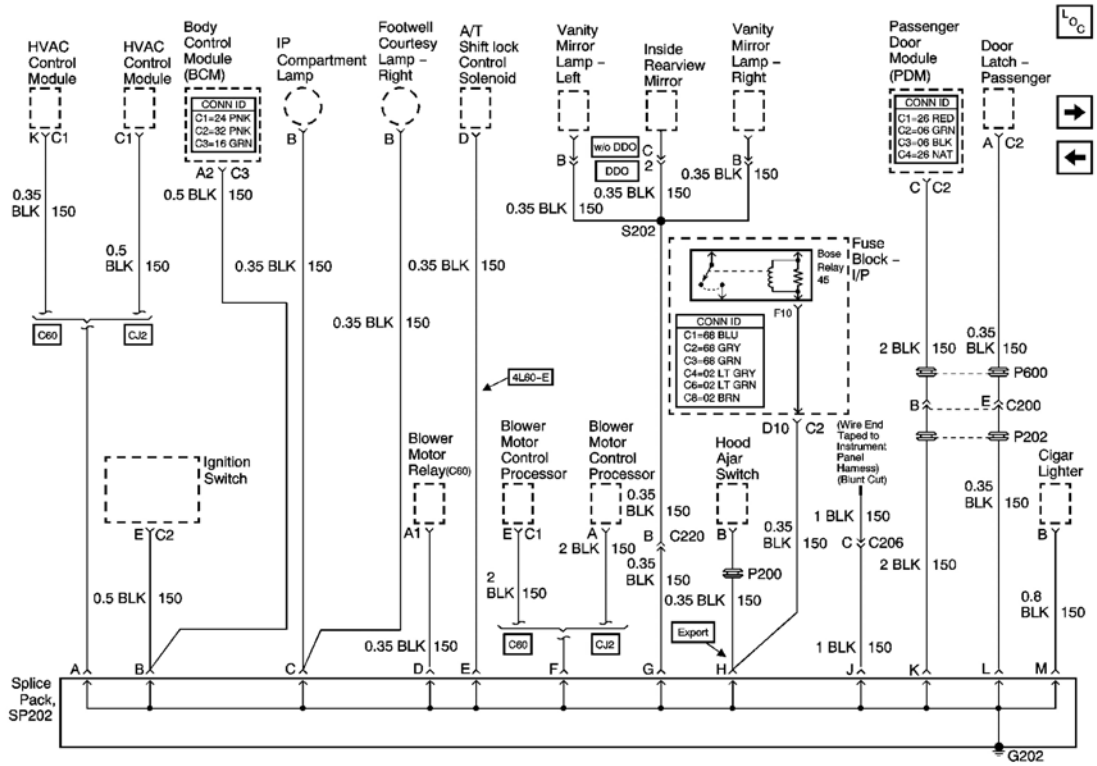

Fig. 62: G202 Schematic
Courtesy of GENERAL MOTORS CORP.

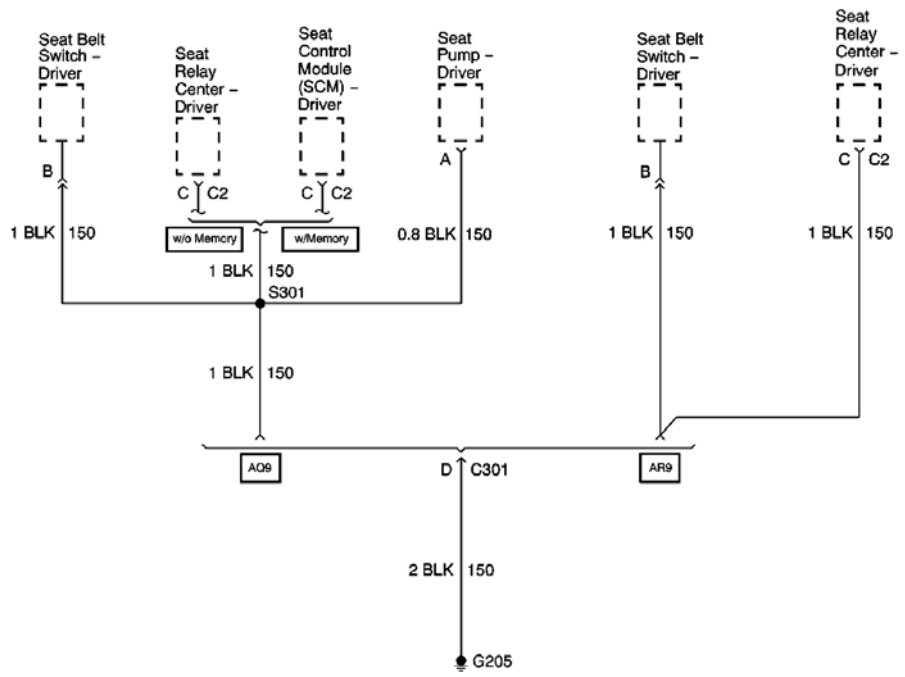

Fig. 63: G205 Schematic
Courtesy of GENERAL MOTORS CORP.

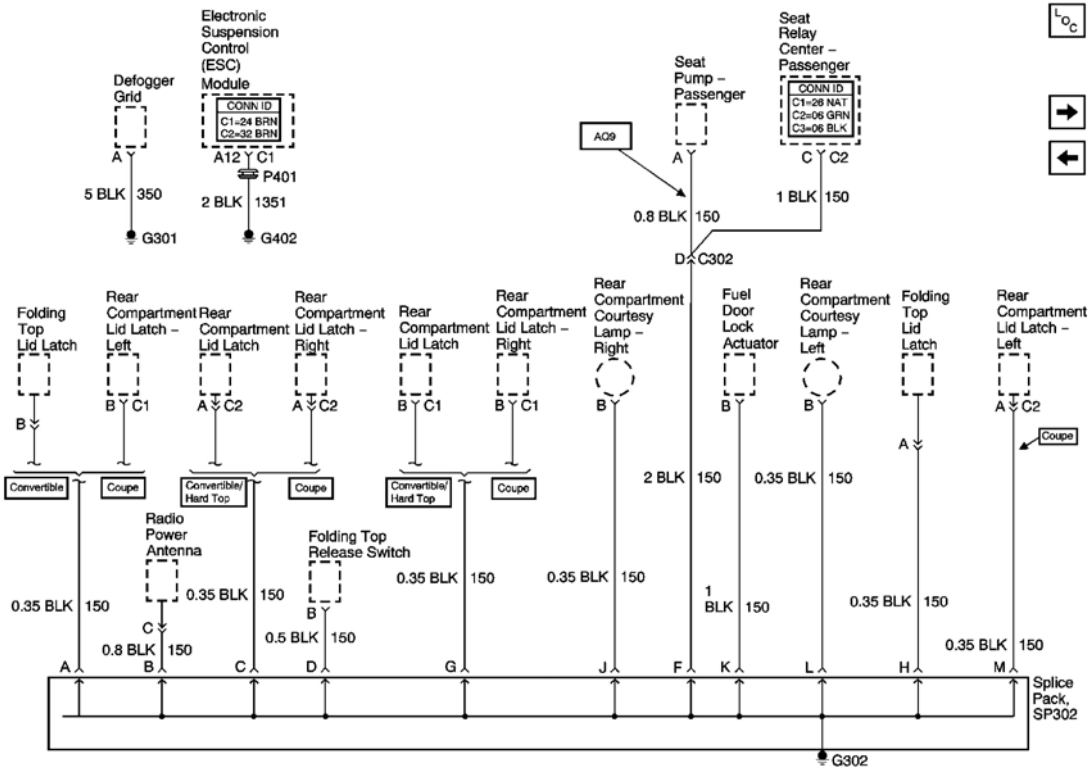

Fig. 64: G301, G402 And G302 Schematic
Courtesy of GENERAL MOTORS CORP.

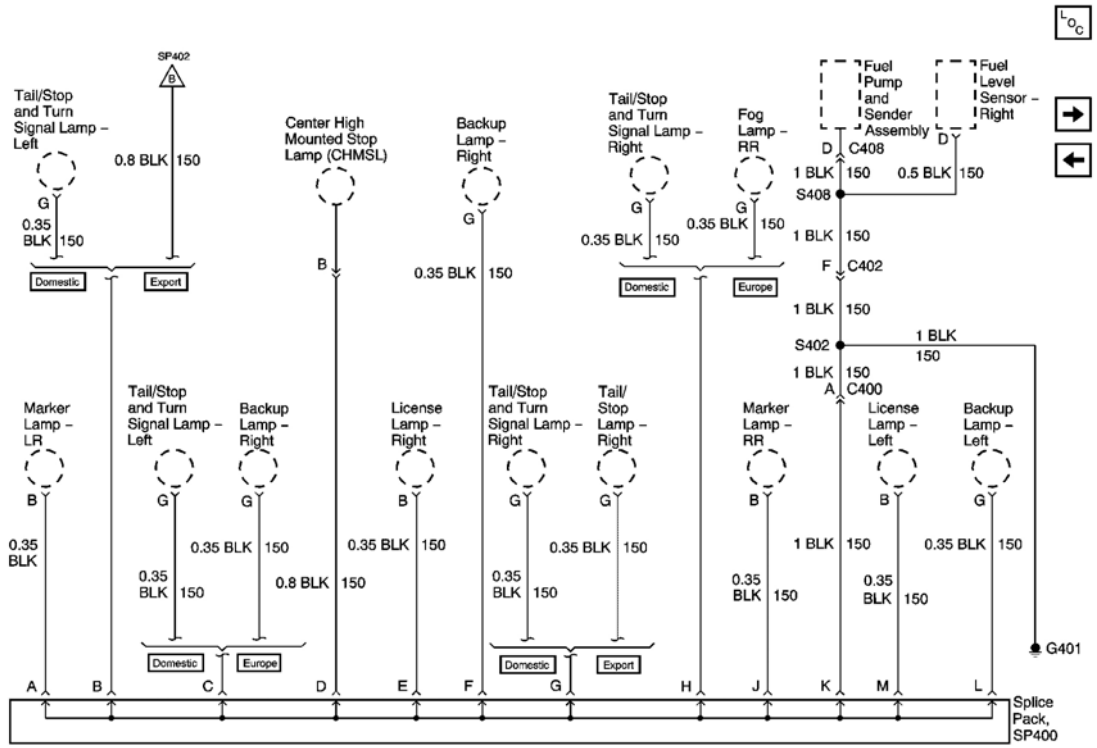

Fig. 65: G401 Schematic
Courtesy of GENERAL MOTORS CORP.

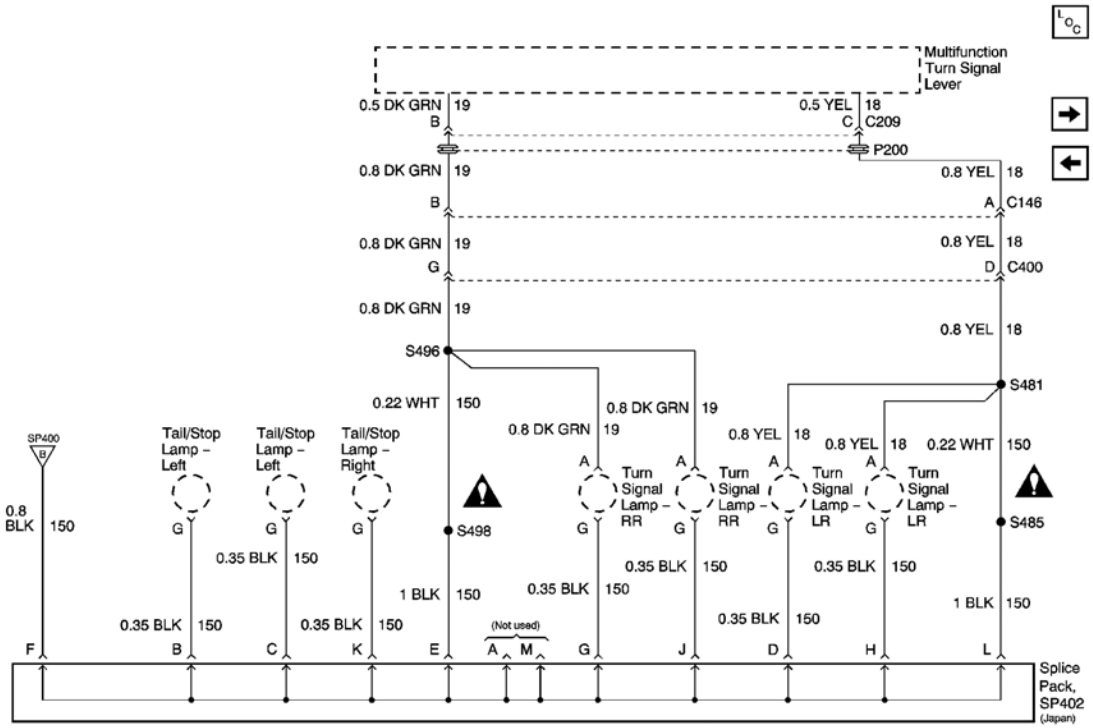

Fig. 66: SP402 Schematic (Japan)
Courtesy of GENERAL MOTORS CORP.

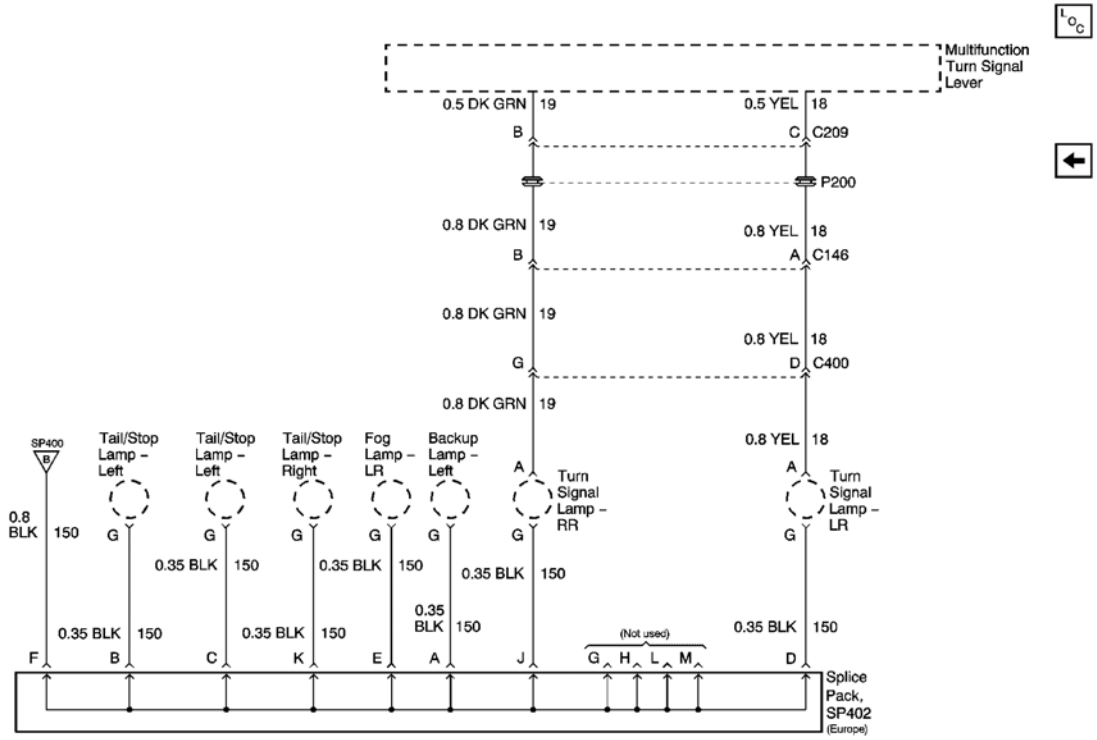

Fig. 67: SP402 Schematic (Europe)
Courtesy of GENERAL MOTORS CORP.

HARNESS ROUTING VIEWS

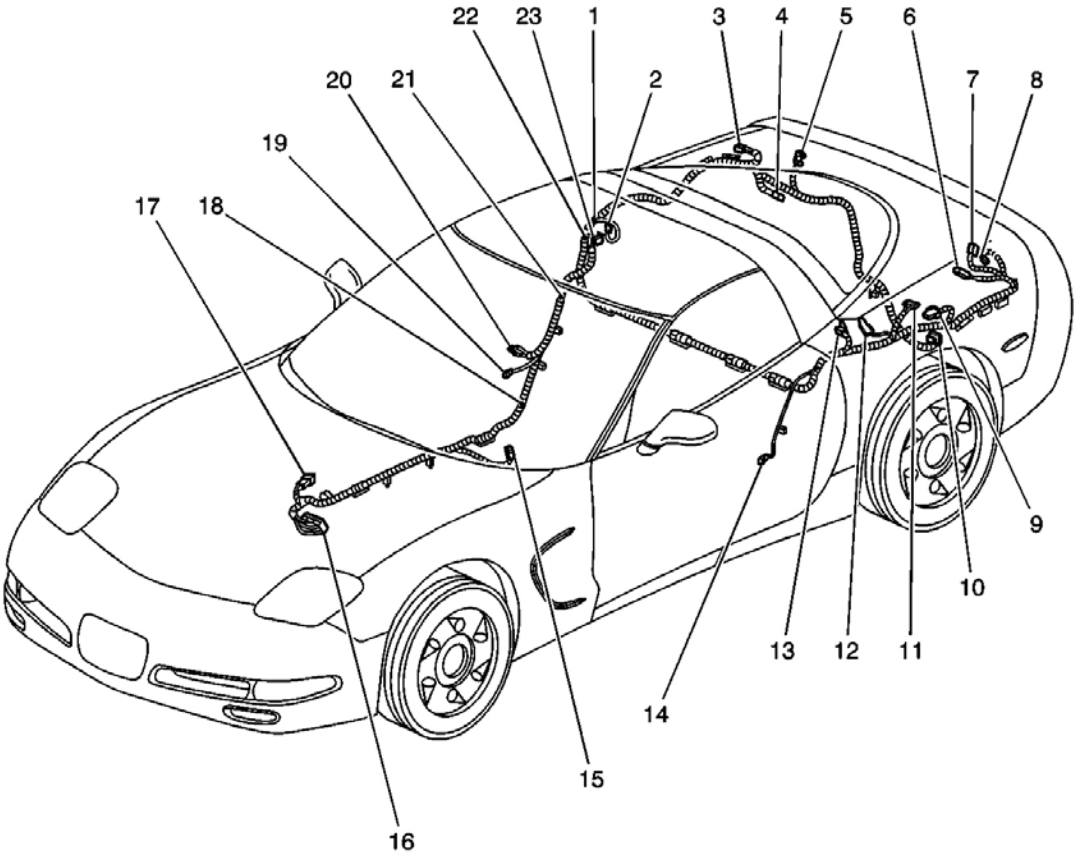

Fig. 68: Front Body Harness Component View
Courtesy of GENERAL MOTORS CORP.

Callouts For Fig. 68

Callout	Component Name
1	S304
2	Inline to Defogger Grid (Power)
3	Rear Compartment Courtesy Lamp - Right
4	Rear Compartment Lid Latch - Right C2
5	Remote Playback Device - CD Changer
6	Rear Compartment Courtesy Lamp - Left
7	Rear Compartment Lid Latch-Left C2
8	Rear Compartment Lid Latch-Left C1
9	Fuel Door Lock Actuator
10	Rear Compartment Lid Latch - Right C1
11	Remote Control Door Lock Receiver (RCDLR)
12	Inline to Defogger Grid (Ground)
13	Speaker - LR

14	G301
15	C302
16	Fuse Block - I/P C3
17	C204
18	S314 and S312
19	G302
20	SP302
21	S302
22	S303
23	Speaker - RR

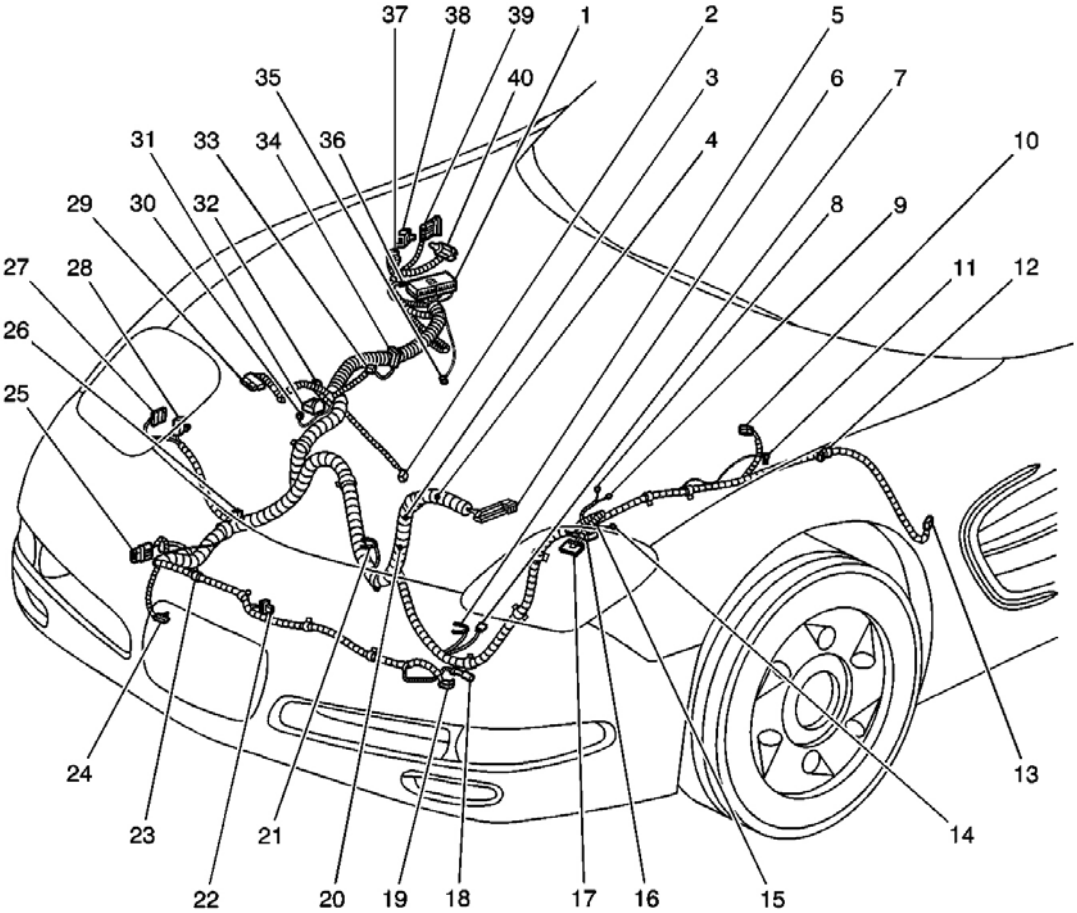

Fig. 69: Forward Lamp Harness Component View
Courtesy of GENERAL MOTORS CORP.

Callouts For Fig. 69

Callout	Component Name

1	Fuse Block - Underhood C3
2	A/C Compressor Clutch
3	S106
4	S107
5	Electronic Brake Control Module (EBCM)
6	Cooling Fan - Left
7	C107
8	Brake Fluid Pressure Sensor
9	Brake Differential Switch
10	Brake Fluid Level Switch
11	Windshield Washer Fluid Pump
12	Repeater Lamp - Left
13	Windshield Washer Fluid Level Switch
14	G103
15	SP101
16	G101
17	Headlamp Door Assembly - Left
18	Fog Lamp - LF
19	Secondary Air Injection (AIR) Pump
20	S108
21	Cooling Fan - Right
22	Ambient Air Temperature Sensor
23	Fog Lamp - RF
24	Horn Assembly
25	C100
26	C113
27	Headlamp Door Control Module C2
28	Headlamp Door Control Module C1
29	Headlamp Door Assembly - Right
30	G102
31	SP100
32	Secondary Air Injection (AIR) Solenoid
33	A/C Refrigerant Pressure Sensor
34	Repeater Lamp - Right
35	G108
36	C102
37	UHEC C6
38	C148
39	C140
40	C150

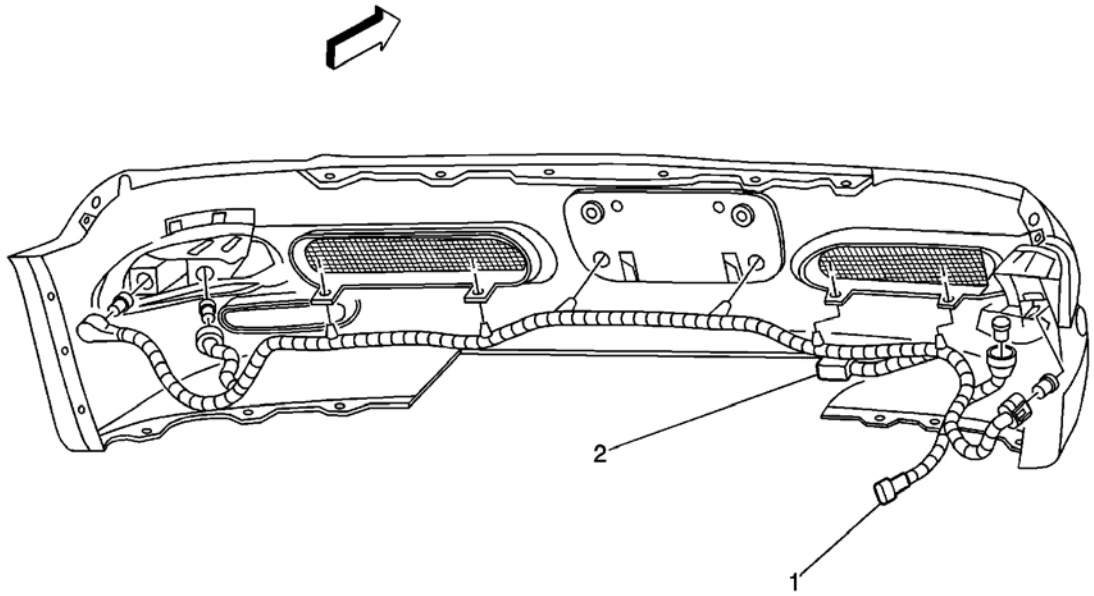

Fig. 70: Forward Lamp Jumper Harness Component View
Courtesy of GENERAL MOTORS CORP.

Callouts For Fig. 70

Callout	Component Name
1	C100
2	Sp102

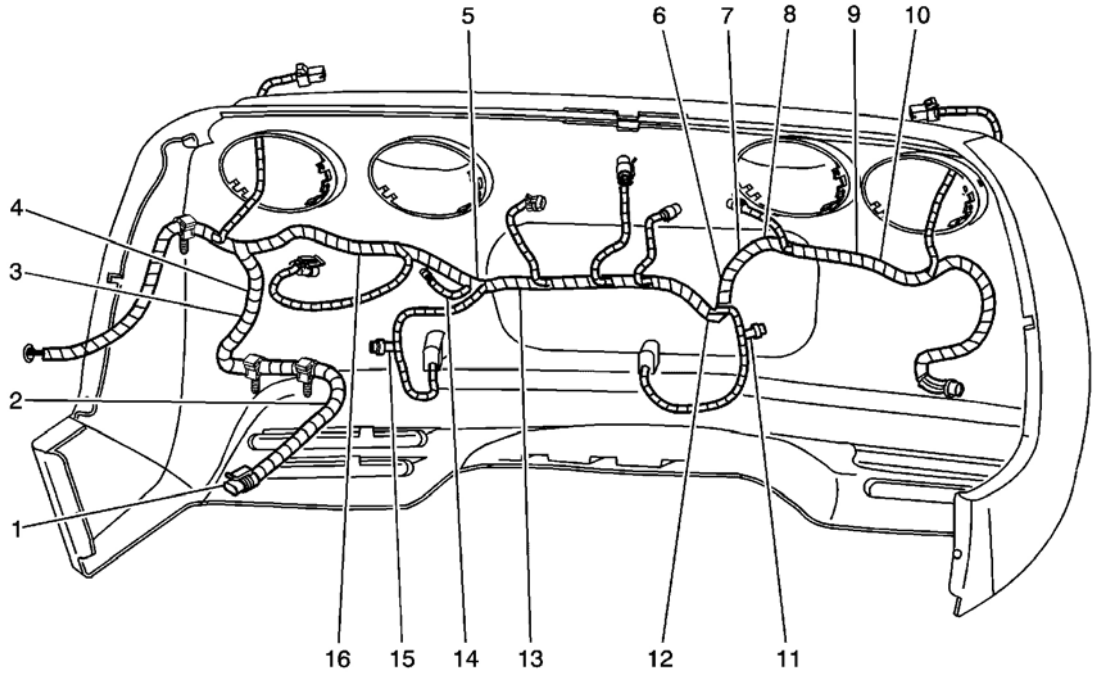

Fig. 71: Body Rear End Harness Routing Component View
Courtesy of GENERAL MOTORS CORP.

Callouts For Fig. 71

Callout	Component Name
1	C400
2	S420 - Europe
3	S496 - Japan
4	S490 - Japan/Europe
5	S485 - Japan
6	S482
7	S484 - Domestic
8	S480 - Japan/Europe
9	S492 - Domestic
10	S494 - Japan/Europe
11	License Lamp Inline Fuse-RH (Export)
12	S498
13	S483 - Japan/Europe
14	S481 - Japan/Domestic
15	License Lamp Inline Fuse-LH (Export)
16	Sp400, Sp402 - Export

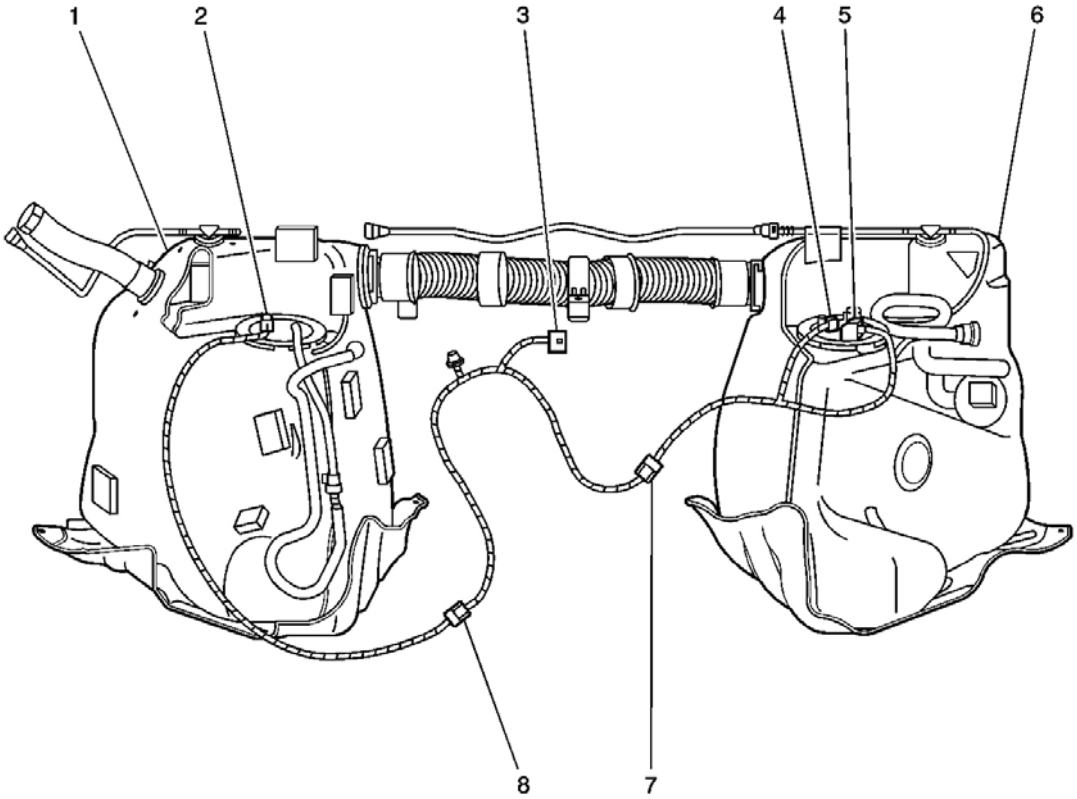

Fig. 72: Fuel Tanks Component View
Courtesy of GENERAL MOTORS CORP.

Callouts For Fig. 72

Callout	Component Name
1	Fuel Tank - Left
2	Fuel Pump and Sender Assembly
3	C402
4	Fuel Tank Pressure (FTP) Sensor
5	Fuel Level Sensor - Right
6	Fuel Tank - Right
7	C414
8	C412

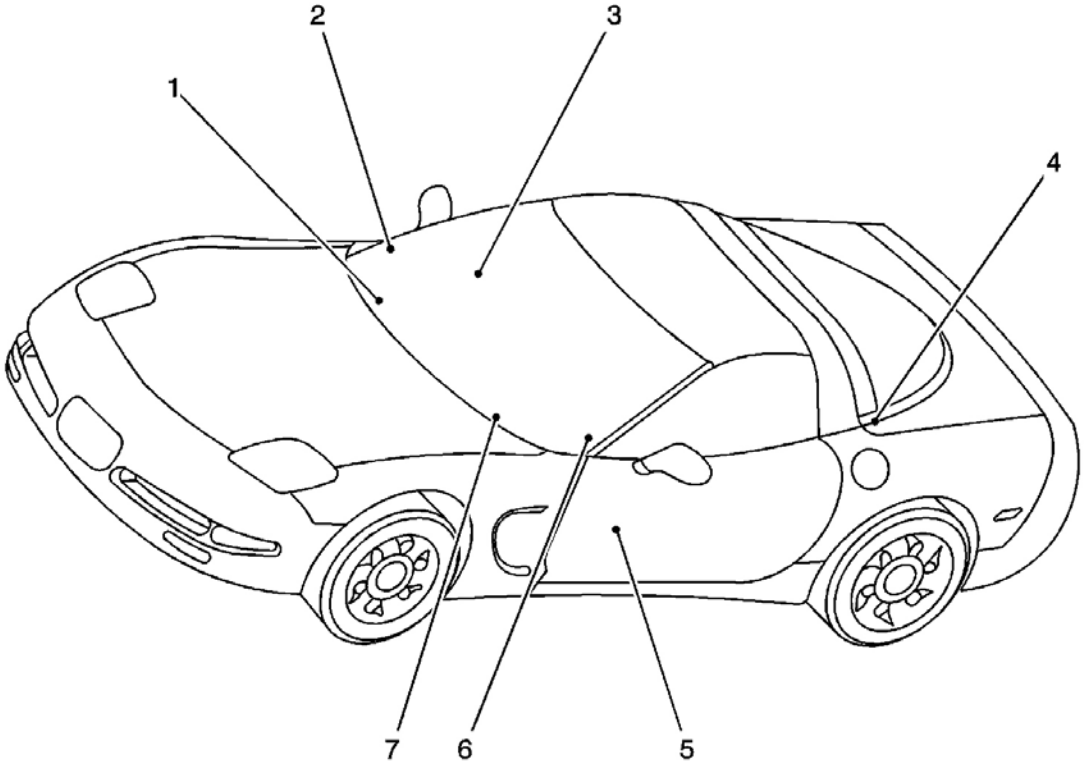

Fig. 73: Pass Through Locations Component View
Courtesy of GENERAL MOTORS CORP.

Callouts For Fig. 73

Callout	Component Name
1	P200
2	P202
3	P600
4	P401
5	P501
6	P201
7	P203

COMPONENT LOCATOR

MASTER ELECTRICAL COMPONENT LIST

Master Electrical Component List

Name	Location	Locator View	Connector End View
		Automatic	Automatic

1-2 Shift Solenoid (1-2SS) Valve	Inside the automatic transmission	**Transmission Electronic Component Views** in Automatic Transmission-4L60-E/4L65-E	**Transmission Internal Connector End Views** in Automatic Transmission-4L60-E/4L65-E
2-3 Shift Solenoid (2-3SS) Valve	Inside the automatic transmission	**Automatic Transmission Electronic Component Views** in Automatic Transmission-4L60-E/4L65-E	**Automatic Transmission Internal Connector End Views** in Automatic Transmission-4L60-E/4L65-E
3-2 Shift Solenoid (3-2SS) Valve	Inside the automatic transmission	**Automatic Transmission Electronic Component Views** in Automatic Transmission-4L60-E/4L65-E	**Automatic Transmission Internal Connector End Views** in Automatic Transmission-4L60-E/4L65-E
A/C Compressor Clutch	Part of the A/C compressor, attached to the RH front of the engine block	**HVAC Component Views** in HVAC Systems - Automatic	**HVAC Connector End Views** in HVAC Systems - Automatic
A/C Compressor Clutch Diode	In the forward lamp harness, at the A/C compressor clutch coil connector	**HVAC Component Views** in HVAC Systems - Automatic	-
A/C Refrigerant Pressure Sensor	Attached to the A/C high side line	**HVAC Component Views** in HVAC Systems - Automatic	**HVAC Connector End Views** in HVAC Systems - Automatic
Accelerator Pedal Position (APP) Sensor	Mounted to the accelerator pedal, LH footwell at the top of the accelerator pedal	**Engine Controls Component Views** in Engine Controls-5.7L	**Engine Controls Connector End Views** in Engine Controls-5.7L
Air Temperature Actuator - Left (CJ2)	Attached to the LH side of the HVAC module case	**HVAC Component Views** in HVAC Systems - Automatic	**HVAC Connector End Views** in HVAC Systems - Automatic
Air Temperature Actuator - Right (CJ2)	Attached to the RH side of the HVAC module case	**HVAC Component Views** in HVAC Systems - Automatic	**HVAC Connector End Views** in HVAC Systems - Automatic
Air Temperature Sensor - Inside (CJ2)	In air outlet vent, RH side of the steering column	**HVAC Component Views** in HVAC Systems - Automatic	**HVAC Connector End Views** in HVAC Systems - Automatic
Ambient Air Temperature Sensor	RH front of engine compartment, on the radiator support	**HVAC Component Views** in HVAC Systems - Automatic	**HVAC Connector End Views** in HVAC Systems - Automatic

Ambient Light Sensor	LH side of dash under the defroster grille	**Lighting Systems Component Views** in Lighting Systems	**Lighting Systems Connector End Views** in Lighting Systems
A/T Shift Lock Control Solenoid	Center console, part of the shifter	**Automatic Transmission Shift Lock Control Component Views** in Shift Lock Control	**Automatic Transmission Shift Lock Control Connector End Views** in Shift Lock Control
Automatic Transmission	Rear of the vehicle, mounted to the front of the axle	**Automatic Transmission Electronic Component Views** in Automatic Transmission-4L60-E4L65-E	**Automatic Transmission Related Connector End Views** in Automatic Transmission-4L60-E4L65-E
Automatic Transmission Fluid Pressure Manual Valve Position Switch	Inside the automatic transmission	**Automatic Transmission Electronic Component Views** in Automatic Transmission-4L60-E/4L65-E	**Automatic Transmission Internal Connector End Views** in Automatic Transmission-4L60-E/4L65-E
Auxiliary Power Outlet Connector	In the center console, front LH side	**Power and Grounding Component Views**	**Power and Grounding Connector End Views**
Backup Lamp - Left	Rear of vehicle	**Lighting Systems Component Views** in Lighting Systems	**Lighting Systems Connector End Views** in Lighting Systems
Backup Lamp - Right	Rear of vehicle	**Lighting Systems Component Views** in Lighting Systems	**Lighting Systems Connector End Views** in Lighting Systems
Backup Lamp Switch (MM6)	RH side of the manual transmission	**Lighting Systems Component Views** in Lighting Systems	**Lighting Systems Connector End Views** in Lighting Systems
Battery	Rear RH side of the engine compartment, rearward of the RH wheelhouse	**Engine Electrical Component Views** in Engine Electrical	-
Blower Motor	Behind the lower RH side of the instrument panel	**HVAC Component Views** in HVAC Systems - Automatic	**HVAC Connector End Views** in HVAC Systems - Automatic
Blower Motor Control Processor	Behind the LH side of the blower motor, under the RH side of the instrument panel	**HVAC Component Views** in HVAC Systems - Automatic	**HVAC Connector End Views** in HVAC Systems - Automatic
Body Control Module (BCM)	RH footwell, mounted to the toe board, behind the carpet	**Body Control System Component Views** in Body Control System	**Body Control System Connector End Views** in Body Control

			System
Bose(R) Signal Processor	Under the LH side of the instrument panel (I/P), above the accelerator pedal	**Entertainment Component Views** in Entertainment	**Entertainment Connector End Views** in Entertainment
Brake Fluid Level Switch	LH rear engine compartment, on the LH side of the brake fluid reservoir	**Hydraulic Brakes Component Views** in Hydraulic Brakes	**Hydraulic Brakes Connector End Views** in Hydraulic Brakes
Brake Fluid Pressure Sensor	Left side of the brake pressure modulator valve (BPMV)	**ABS Component Views** in Antilock Brake System	**ABS Connector End Views** in Antilock Brake System
Brake Pressure Modulator Valve (BPMV)	LH side of the engine compartment, near power steering pump	**ABS Component Views** in Antilock Brake System	-
Brush-Horn Slip Ring	Inside the steering column, behind the steering wheel	**Horns Component Views** in Horns	-
Camshaft Position (CMP) Sensor	Top center, rear of the engine	**Engine Controls Component Views** in Engine Controls-5.7L	**Engine Controls Connector End Views** in Engine Controls-5.7L
Center High Mounted Stop Lamp (CHMSL)	Top center of the rear fascia	**Lighting Systems Component Views** in Lighting Systems	**Lighting Systems Connector End Views** in Lighting Systems
Cigar Lighter	Front center console, below the HVAC control head, in front of the shifter	**Power and Grounding Component Views**	**Power and Grounding Connector End Views**
Clutch Pedal Position Switch (CPP)	Under the LH side of the instrument panel, mounted to the bracket behind clutch pedal	**Cruise Control Component Views** in Cruise Control	**Cruise Control Connector End Views** in Cruise Control
Clutch Pedal Start Switch	Mounted on the bracket in front of the brake pedal	**Engine Electrical Component Views** in Engine Electrical	**Engine Electrical Connector End Views** in Engine Electrical
Cooling Fan-Left	Front of the engine compartment behind the LH side of the radiator	**Cooling System Component Views** in Engine Cooling	**Cooling System Connector End Views** in Engine Cooling
Cooling Fan - Right	Front of the engine compartment behind the RH side of the radiator	**Cooling System Component Views** in Engine Cooling	**Cooling System Connector End Views** in Engine Cooling
Crankshaft Position (CKP) Sensor	Lower RH side of the engine, behind the starter	**Engine Controls Component Views** in Engine Controls-5.7L	**Engine Controls Connector End Views** in Engine Controls-5.7L
Cruise Control ON/OFF	Part of the multifunction	**Cruise Control Component Views** in	**Inline Harness**

Switch	turn signal lever	Cruise Control	**Connector End Views**
Data Link Connector (DLC)	LH side of instrument panel, below the steering column	**Data Link Communications Component Views** in Data Link Communications	**Data Link Communications Connector End Views** in Data Link Communications
Defogger Grid	On rear window	**Stationary Windows Component Views** in Stationary Windows	**Stationary Windows Connector End Views** in Stationary Windows
Dimmer/Head Up Display (HUD) Switch	LH side of the instrument panel, LH side of the instrument cluster	**Instrument Panel, Gages, and Console Component Views** in Instrument Panel, Gages, and Console	-
Dimmer Switch	LH side of the instrument panel, LH side of the instrument cluster	**Lighting Systems Component Views** in Lighting Systems	-
Door Latch-Driver	In rear LH door	**Power Door Systems Component Views** in Doors	**Power Door Systems Connector End Views** in Doors
Door Latch - Front Passenger	In rear of RH door	**Power Door Systems Component Views** in Doors	**Power Door Systems Connector End Views** in Doors
Door Switch-Driver	On the front center of the LH door trim panel	**Power Door Systems Component Views** in Doors	**Power Door Systems Connector End Views** in Doors
Door Switch - Front Passenger	On the front center of the RH door trim panel	**Power Door Systems Component Views** in Doors	**Power Door Systems Connector End Views** in Doors
Driver Door Module (DDM)	Behind the LH door trim panel, bottom center of the door, rear of the speaker	**Power Door Systems Component Views** in Doors	**Power Door Systems Connector End Views** in Doors
Driver Information Center (DIC) Switch - Right	LH side of the instrument panel, RH side of the instrument cluster	**Instrument Panel, Gages, and Console Component Views** in Instrument Panel, Gages, and Console	-
Electronic Brake Control Module (EBCM)	Front LH side of the engine compartment, mounted on the frame rail	**ABS Component Views** in Antilock Brake System	**ABS Connector End Views** in Antilock Brake System
Electronic Suspension Control (ESC) Module	Rear compartment, inside the LH storage compartment	**Suspension Controls Component Views** in Electronic Suspension Controls	**Suspension Controls Connector End Views** in Electronic Suspension Controls
Engine Coolant		**Engine Controls**	**Engine Controls**

Temperature (ECT) Sensor	Front LH side of the engine below the generator	**Component Views** in Engine Controls-5.7L	**Connector End Views** in Engine Controls-5.7L
Engine Oil Level Switch	RH side of the oil pan	**Instrument Panel, Gages, and Console Component Views** in Instrument Panel, Gages, and Console	**Instrument Panel, Gages, and Console Connector End Views** in Instrument Panel, Gages, and Console
Engine Oil Pressure (EOP) Sensor	Top center, rear of the engine	**Instrument Panel, Gages, and Console Component Views** in Instrument Panel, Gages, and Console	**Instrument Panel, Gages, and Console Connector End Views** in Instrument Panel, Gages, and Console
Engine Oil Temperature (EOT) Sensor	Rear of the engine, bottom LH side	**Instrument Panel, Gages, and Console Component Views** in Instrument Panel, Gages, and Console	**Instrument Panel, Gages, and Console Connector End Views** in Instrument Panel, Gages, and Console
Evaporative Emission (EVAP) Canister Purge Solenoid	On the front LH side of the intake manifold	**Engine Controls Component Views** in Engine Controls-5.7L	**Engine Controls Connector End Views** in Engine Controls-5.7L
Evaporative Emission (EVAP) Canister Vent Solenoid	Mounted to the right side rear compartment brace, inside RR wheelhouse panel	**Engine Controls Component Views** in Engine Controls-5.7L	**Engine Controls Connector End Views** in Engine Controls-5.7L
Fog Lamp-LF	Lower front LH side of the vehicle	**Lighting Systems Component Views** in Lighting Systems	**Lighting Systems Connector End Views** in Lighting Systems
Fog Lamp - LR (Europe)	Attached to the LH side of the license plate	**Lighting Systems Component Views** in Lighting Systems	**Lighting Systems Connector End Views** in Lighting Systems
Fog Lamp - RF	Lower front of the vehicle, RH side	**Lighting Systems Component Views** in Lighting Systems	**Lighting Systems Connector End Views** in Lighting Systems
Fog Lamp - RR (Europe)	Attached to the RH side of the license plate	**Lighting Systems Component Views** in Lighting Systems	**Lighting Systems Connector End Views** in Lighting Systems
Fog Lamp/Rear Compartment Lid Release Switch (Domestic)	Left of the steering column, mounted in the instrument panel	**Lighting Systems Component Views** in Lighting Systems	**Lighting Systems Connector End Views** in Lighting Systems
Fog Lamp Switch (Export)	LH side of the steering column, mounted in the instrument panel	**Lighting Systems Component Views** in Lighting Systems	**Lighting Systems Connector End Views** in Lighting Systems
	Part of the folding top lid	**Body Rear End**	**Body Rear End**

Folding Top Actuator	latch	**Component Views** in Body Rear End	**Connector End Views** in Body Rear End
Folding Top Ajar Indicator Switch	Part of the folding top lid latch	**Body Rear End Component Views** in Body Rear End	**Body Rear End Connector End Views** in Body Rear End
Folding Top Lid Latch	Attached to the stowage lid extension panel bracket	**Body Rear End Component Views** in Body Rear End	**Body Rear End Connector End Views** in Body Rear End
Folding Top Release Switch	Under the RH side of the storage compartment lid	**Body Rear End Component Views** in Body Rear End	**Body Rear End Connector End Views** in Body Rear End
Footwell Courtesy Lamp - Left	Mounted in the LH footwell, top LH side	**Lighting Systems Component Views** in Lighting Systems	**Lighting Systems Connector End Views** in Lighting Systems
Footwell Courtesy Lamp - Right	Mounted in the RH footwell, top RH side	**Lighting Systems Component Views** in Lighting Systems	**Lighting Systems Connector End Views** in Lighting Systems
Front Window Antenna (Coupe/Hardtop)	In windshield	**Entertainment Component Views** in Entertainment	**Entertainment Connector End Views** in Entertainment
Fuel Door Lock Actuator	LH side of vehicle, inside rear compartment, above the fuel tank filler door	**Body Rear End Component Views** in Body Rear End	**Body Rear End Connector End Views** in Body Rear End
Fuel Door Lock Release Switch (Domestic)	Inside center console, front RH side	**Body Rear End Component Views** in Body Rear End	**Body Rear End Connector End Views** in Body Rear End
Fuel Injector 1	Top of the engine in the fuel rail below the fuel rail covers, above each cylinder	**Engine Controls Component Views** in Engine Controls-5.7L	**Engine Controls Connector End Views** in Engine Controls-5.7L
Fuel Injector 2	Top of the engine in the fuel rail below the fuel rail covers, above each cylinder	**Engine Controls Component Views** in Engine Controls-5.7L	**Engine Controls Connector End Views** in Engine Controls-5.7L
Fuel Injector 3	Top of the engine in the fuel rail below the fuel rail covers, above each cylinder	**Engine Controls Component Views** in Engine Controls-5.7L	**Engine Controls Connector End Views** in Engine Controls-5.7L
Fuel Injector 4	Top of the engine in the fuel rail below the fuel rail covers, above each cylinder	**Engine Controls Component Views** in Engine Controls-5.7L	**Engine Controls Connector End Views** in Engine Controls-5.7L
Fuel Injector 5	Top of the engine in the fuel rail below the fuel rail covers, above each cylinder	**Engine Controls Component Views** in Engine Controls-5.7L	**Engine Controls Connector End Views** in Engine Controls-

			5.7L
Fuel Injector 6	Top of the engine in the fuel rail below the fuel rail covers, above each cylinder	**Engine Controls Component Views** in Engine Controls-5.7L	**Engine Controls Connector End Views** in Engine Controls-5.7L
Fuel Injector 7	Top of the engine in the fuel rail below the fuel rail covers, above each cylinder	**Engine Controls Component Views** in Engine Controls-5.7L	**Engine Controls Connector End Views** in Engine Controls-5.7L
Fuel Injector 8	Top of the engine in the fuel rail below the fuel rail covers, above each cylinder	**Engine Controls Component Views** in Engine Controls-5.7L	**Engine Controls Connector End Views** in Engine Controls-5.7L
Fuel Level Sensor-Right	Inside the top of the RH fuel tank	**Instrument Panel, Gages, and Console Component Views** in Instrument Panel, Gages, and Console	**Instrument Panel, Gages, and Console Connector End Views** in Instrument Panel, Gages, and Console
Fuel Pump and Sender Assembly	Inside the top of the LH fuel tank	**Engine Controls Component Views** in Engine Controls-5.7L	**Engine Controls Connector End Views** in Engine Controls-5.7L
Fuel Tank Pressure (FTP) Sensor	Inside the top of the RH fuel tank	**Engine Controls Component Views** in Engine Controls-5.7L	**Engine Controls Connector End Views** in Engine Controls-5.7L
Fuse Block-I/P	RH footwell, mounted on the toe board, behind the carpet	**Power and Grounding Component Views**	**Electrical Center Identification Views**
Fuse Block-Underhood	RH side of the engine compartment, between the wheelhouse and the dash panel, front of the battery	**Power and Grounding Component Views**	**Electrical Center Identification Views**
Generator	Front of the LH valve cover	**Engine Electrical Component Views** in Engine Electrical	**Engine Electrical Connector End Views** in Engine Electrical
Hazard Switch	Top center of instrument panel	**Lighting Systems Component Views** in Lighting Systems	**Lighting Systems Connector End Views** in Lighting Systems
Headlamp Door Assembly-Left	In LH front side of the vehicle, between the LH fender and hood	**Lighting Systems Component Views** in Lighting Systems	**Lighting Systems Connector End Views** in Lighting Systems
Headlamp Door Assembly - Right	In RH front side of the vehicle, between the RH fender and hood	**Lighting Systems Component Views** in Lighting Systems	**Lighting Systems Connector End Views** in Lighting Systems

Headlamp Door Control Module	Front RH side below the RH headlamp assembly	**Lighting Systems Component Views** in Lighting Systems	**Lighting Systems Connector End Views** in Lighting Systems
Head Up Display (HUD)	Top LH side of instrument panel, behind instrument cluster	**Instrument Panel, Gages, and Console Component Views** in Instrument Panel, Gages, and Console	-
Heated Oxygen Sensor (HO2S) Bank 1 Sensor 1	In LH exhaust manifold	**Engine Controls Component Views** in Engine Controls-5.7L	**Engine Controls Connector End Views** in Engine Controls-5.7L
Heated Oxygen Sensor (HO2S) Bank 1 Sensor 2	In exhaust system rearward of the catalytic converter	**Engine Controls Component Views** in Engine Controls-5.7L	**Engine Controls Connector End Views** in Engine Controls-5.7L
Heated Oxygen Sensor (HO2S) Bank 2 Sensor 1	In RH exhaust manifold	**Engine Controls Component Views** in Engine Controls-5.7L	**Engine Controls Connector End Views** in Engine Controls-5.7L
Heated Oxygen Sensor (HO2S) Bank 2 Sensor 2	In exhaust system rearward of the catalytic converter	**Engine Controls Component Views** in Engine Controls-5.7L	**Engine Controls Connector End Views** in Engine Controls-5.7L
Hood Ajar Switch (Export)	Engine compartment support bracket	**Theft Deterrent System Component Views** in Theft Deterrent	**Theft Deterrent System Connector End Views** in Steering Wheel and Column - Tilt
Horn Assembly	Mounted outboard of the RH front skid plate	**Horns Component Views** in Horns	**Horns Connector End Views** in Horns
Horn Switch	In the center of the steering wheel	**Horns Component Views** in Horns	-
HVAC Control Module	Center of the instrument panel, under the radio	**HVAC Component Views** in HVAC Systems - Automatic	**HVAC Connector End Views** in HVAC Systems - Automatic
Ignition Coil/Module 1	On the valve cover at the top of each cylinder	**Engine Controls Component Views** in Engine Controls-5.7L	**Engine Controls Connector End Views** in Engine Controls-5.7L
Ignition Coil/Module 2	On the valve cover at the top of each cylinder	**Engine Controls Component Views** in Engine Controls-5.7L	**Engine Controls Connector End Views** in Engine Controls-5.7L
		Engine Controls	**Engine Controls**

Ignition Coil/Module 3	On the valve cover at the top of each cylinder	**Component Views** in Engine Controls-5.7L	**Connector End Views** in Engine Controls-5.7L
Ignition Coil/Module 4	On the valve cover at the top of each cylinder	**Engine Controls Component Views** in Engine Controls-5.7L	**Engine Controls Connector End Views** in Engine Controls-5.7L
Ignition Coil/Module 5	On the valve cover at the top of each cylinder	**Engine Controls Component Views** in Engine Controls-5.7L	**Engine Controls Connector End Views** in Engine Controls-5.7L
Ignition Coil/Module 6	On the valve cover at the top of each cylinder	**Engine Controls Component Views** in Engine Controls-5.7L	**Engine Controls Connector End Views** in Engine Controls-5.7L
Ignition Coil/Module 7	On the valve cover at the top of each cylinder	**Engine Controls Component Views** in Engine Controls-5.7L	**Engine Controls Connector End Views** in Engine Controls-5.7L
Ignition Coil/Module 8	On the valve cover at the top of each cylinder	**Engine Controls Component Views** in Engine Controls-5.7L	**Engine Controls Connector End Views** in Engine Controls-5.7L
Ignition Switch	LH side of the instrument panel between the radio and the steering column	**Power and Grounding Component Views**	**Power and Grounding Connector End Views**
Inflatable Restraint I/P Module	Center of the RH side of the instrument panel	**SIR Component Views** in SIR	**SIR Connector End Views** in SIR
Inflatable Restraint I/P Module Disable Switch LED	In Instrument Panel accessory trim panel in front of the center console compartment	**SIR Component Views** in SIR	**SIR Connector End Views** in SIR
Inflatable Restraint I/P Module Disable Switch	RH side of glove box	**SIR Component Views** in SIR	**SIR Connector End Views** in SIR
Inflatable Restraint Sensing and Diagnostic Module (SDM)	Behind the center of the instrument panel, under the HVAC control head	**SIR Component Views** in SIR	**SIR Connector End Views** in SIR
Inflatable Restraint Steering Wheel Module	In center of the steering wheel	**SIR Component Views** in SIR	**Inline Harness Connector End Views**
Inflatable Restraint Steering Wheel Module Coil	In steering column behind the center of the steering wheel	**SIR Component Views** in SIR	**Inline Harness Connector End Views**
Inside Rearview Mirror	Top center of the front windshield, bottom of mirror	**Stationary Windows Component Views** in Stationary Windows	**Stationary Windows Connector End Views** in Stationary Windows

Instrument Panel Cluster (IPC)	Top LH side of instrument panel, behind the steering wheel	**Instrument Panel, Gages, and Console Component Views** in Instrument Panel, Gages, and Console	**Instrument Panel, Gages, and Console Connector End Views** in Instrument Panel, Gages, and Console
I/P Compartment Lamp	In instrument panel compartment, top RH side	**Lighting Systems Component Views** in Lighting Systems	**Lighting Systems Connector End Views** in Lighting Systems
Key Resistor Pellet	In the ignition key	-	-
Knock Sensor (KS) 1	Center of the engine below the intake manifold	**Engine Controls Component Views** in Engine Controls-5.7L	**Engine Controls Connector End Views** in Engine Controls-5.7L
Knock Sensor (KS) 2	Center of the engine below the intake manifold	**Engine Controls Component Views** in Engine Controls-5.7L	**Engine Controls Connector End Views** in Engine Controls-5.7L
Lateral Accelerometer Sensor	Mounted to the floor panel under the RH seat	**ABS Component Views** in Antilock Brake System	**ABS Connector End Views** in Antilock Brake System
License Lamp-Left	Center of rear vehicle, above the LH side of license plate	**Lighting Systems Component Views** in Lighting Systems	**Lighting Systems Connector End Views** in Lighting Systems
License Lamp-Right	Center of rear vehicle, above the RH side of license plate	**Lighting Systems Component Views** in Lighting Systems	**Lighting Systems Connector End Views** in Lighting Systems
License Lamp Inline Fuse -LH (Export)	Rear body harness, approximately 10.0 cm (4.0 in) from breakout for LR backup lamp	**Harness Routing Views**	**Lighting Systems Connector End Views** in Lighting Systems
License Lamp Inline Fuse-RH (Export)	Rear body harness, approximately 10.0 cm (4.0 in) from breakout for RR backup lamp	**Harness Routing Views**	**Lighting Systems Connector End Views** in Lighting Systems
Manifold Absolute Pressure (MAP) Sensor	Rear of the intake manifold	**Engine Controls Component Views** in Engine Controls-5.7L	**Engine Controls Connector End Views** in Engine Controls-5.7L
Marker Lamp-LF	Lower front LH side of the vehicle	**Lighting Systems Component Views** in Lighting Systems	**Lighting Systems Connector End Views** in Lighting Systems
Marker Lamp-LR	LH rear quarter panel, rear of the wheelwell	**Lighting Systems Component Views** in Lighting Systems	**Lighting Systems Connector End Views** in Lighting Systems
	Lower front RH side of the	**Lighting Systems**	**Lighting Systems**

Marker Lamp - RF	vehicle	**Component Views** in Lighting Systems	**Connector End Views** in Lighting Systems
Marker Lamp - RR	RH rear quarter panel, rear of the wheelwell	**Lighting Systems Component Views** in Lighting Systems	**Lighting Systems Connector End Views** in Lighting Systems
Mass Air Flow (MAF) Sensor	In the intake duct before air filter assembly	**Engine Controls Component Views** in Engine Controls-5.7L	**Engine Controls Connector End Views** in Engine Controls-5.7L
Multifunction Turn Signal Lever	LH stalk of the steering column	**Lighting Systems Component Views** in Lighting Systems	**Inline Harness Connector End Views**
Outside Rearview Mirror - Driver	Mounted on outside of the LH door, top front corner	**Power Door Systems Component Views** in Doors	**Power Door Systems Connector End Views** in Doors
Outside Rearview Mirror - Passenger	Mounted on outside of the RH door, top front corner	**Power Door Systems Component Views** in Doors	**Power Door Systems Connector End Views** in Doors
Park Brake Switch	Center console, below the park brake	**Hydraulic Brakes Component Views** in Hydraulic Brakes	**Hydraulic Brakes Connector End Views** in Hydraulic Brakes
Park/Neutral Position (PNP) Switch	LH side of the automatic transmission	**Engine Controls Component Views** in Engine Controls-5.7L	**Automatic Transmission Related Connector End Views** in Automatic Transmission-4L60-E/4L65-E
Park Lamp-LF (Export)	Lower front LH side of vehicle	**Lighting Systems Component Views** in Lighting Systems	**Lighting Systems Connector End Views** in Lighting Systems
Park Lamp - RF (Export)	Lower front RH side of vehicle	**Lighting Systems Component Views** in Lighting Systems	**Lighting Systems Connector End Views** in Lighting Systems
Park/Turn Signal Lamp-LF (Domestic)	Lower front LH side of the vehicle	**Lighting Systems Component Views** in Lighting Systems	**Lighting Systems Connector End Views** in Lighting Systems
Park/Turn Signal Lamp - RF (Domestic)	Lower front RH side of the vehicle	**Lighting Systems Component Views** in Lighting Systems	**Lighting Systems Connector End Views** in Lighting Systems
Passenger Door Module (PDM)	Behind the RH door trim panel, bottom center of the door, rear of the speaker	**Power Door Systems Component Views** in Doors	**Power Door Systems Connector End Views** in Doors
Powertrain Control Module (PCM)	Behind the RF fender, between the wheelhouse and the dash panel, below	**Engine Controls Component Views** in	**Powertrain Control Module (PCM) Connector End Views**

	the battery	Engine Controls-5.7L	in Engine Controls-5.7L
Pressure Control Solenoid Valve	Inside the transmission	**Automatic Transmission Electronic Component Views** in Automatic Transmission-4L60-E/4L65-E	**Automatic Transmission Internal Connector End Views** in Automatic Transmission-4L60-E/4L65-E
Radio	Center of instrument panel above the HVAC control assembly	**Entertainment Component Views** in Entertainment	**Entertainment Connector End Views** in Entertainment
Radio Antenna Module (Coupe)	Behind the lower B-pillar trim panel	**Entertainment Component Views** in Entertainment	**Entertainment Connector End Views** in Entertainment
Radio Power Antenna (Convertible)	Behind the RR quarter inner trim panel	**Entertainment Component Views** in Entertainment	**Entertainment Connector End Views** in Entertainment
Rear Compartment Courtesy Lamp-Left	Attached to the LH rear compartment trim panel	**Lighting Systems Component Views** in Lighting Systems	**Lighting Systems Connector End Views** in Lighting Systems
Rear Compartment Courtesy Lamp - Right	Attached to the RH rear compartment trim panel	**Lighting Systems Component Views** in Lighting Systems	**Lighting Systems Connector End Views** in Lighting Systems
Rear Compartment Lid Ajar Switch	Rear compartment, on the rear compartment lid latch	**Body Rear End Component Views** in Body Rear End	**Body Rear End Connector End Views** in Body Rear End
Rear Compartment Lid Latch - Left (Coupe)	LH rear compartment	**Body Rear End Component Views** in Body Rear End	**Body Rear End Connector End Views** in Body Rear End
Rear Compartment Lid Latch - Right (Coupe)	RH rear compartment	**Body Rear End Component Views** in Body Rear End	**Body Rear End Connector End Views** in Body Rear End
Rear Compartment Lid Latch (Hardtop/Convertible)	Inside the center of the rear compartment, attached to the latch bracket	**Body Rear End Component Views** in Body Rear End	**Body Rear End Connector End Views** in Body Rear End
Rear Compartment Lid/Fuel Door Lock Release Switch (Export)	Inside the center console, front RH side	**Body Rear End Component Views** in Body Rear End	**Body Rear End Connector End Views** in Body Rear End
Remote Control Door Lock Receiver (RCDLR)	LH side of the rear compartment, behind the side trim panel	**Keyless Entry Component Views** in Keyless Entry	**Keyless Entry Connector End Views** in Keyless Entry
Remote Playback Device - CD Changer	Rear compartment, in the center storage compartment	**Entertainment Component Views** in Entertainment	**Entertainment Connector End Views** in Entertainment

Repeater Lamp-Left (Export)	On LF fender behind LF wheel, side of the vehicle	**Lighting Systems Component Views** in Lighting Systems	**Lighting Systems Connector End Views** in Lighting Systems
Repeater Lamp - Right (Export)	On RF fender behind RF wheel, side of the vehicle	**Lighting Systems Component Views** in Lighting Systems	**Lighting Systems Connector End Views** in Lighting Systems
Reverse Inhibit Solenoid	Top of the manual transmission	**Manual Transmission Component Views** in Manual Transmission	**Manual Transmission Connector End Views** in Manual Transmission
Seat Adjuster Switch-Driver	Front LH side of the LH seat	**Power Seat Systems Component Views** in Seats	**Power Seat Systems Connector End Views** in Seats
Seat Adjuster Switch - Passenger	Front RH side of the RH seat	**Power Seat Systems Component Views** in Seats	**Power Seat Systems Connector End Views** in Seats
Seat Belt Switch - Driver	LH passenger compartment, part of the LH seat belt buckle assembly	**Seat Belt Component Views** in Seat Belts	**Seat Belt Connector End Views** in Seat Belts
Seat Control Module (SCM)-Driver (W/ memory seats)	Under the front of the LH seat	**Power Seat Systems Component Views** in Seats	**Power Seat Systems Connector End Views** in Seats
Seat Lower Motor - Driver	Under the center of the LH seat	**Power Seat Systems Component Views** in Seats	**Power Seat Systems Connector End Views** in Seats
Seat Lower Motor - Passenger	Under the center of the RH seat	**Power Seat Systems Component Views** in Seats	**Power Seat Systems Connector End Views** in Seats
Seat Pump - Driver	Under the center of the drivers seat	**Power Seat Systems Component Views** in Seats	**Power Seat Systems Connector End Views** in Seats
Seat Pump - Passenger	Under the center of the passengers seat	**Power Seat Systems Component Views** in Seats	**Power Seat Systems Connector End Views** in Seats
Seat Relay Center - Driver (W/O Memory Seats)	Under the center of the LH seat	**Power Seat Systems Component Views** in Seats	**Power Seat Systems Connector End Views** in Seats
Seat Relay Center - Passenger	Under the center of the RH seat	**Power Seat Systems Component Views** in Seats	**Power Seat Systems Connector End Views** in Seats
Secondary Air Injection (AIR) Pump	LH front outboard of the skid bar	**Engine Controls Component Views** in Engine Controls-5.7L	**Engine Controls Connector End Views** in Engine Controls-5.7L
	Behind RF fender, between		**Engine Controls**

Secondary Air Injection (AIR) Solenoid	the wheel house and dash panel, above the Powertrain Control Module (PCM)	**Engine Controls Component Views** in Engine Controls-5.7L	**Connector End Views** in Engine Controls-5.7L
Skip Shift Solenoid	LH side of the manual transmission	**Manual Transmission Component Views** in Manual Transmission	**Manual Transmission Connector End Views** in Manual Transmission
Speaker-LF Door	On the inside of the LH door, lower front corner	**Entertainment Component Views** in Entertainment	**Entertainment Connector End Views** in Entertainment
Speaker - LR	LH side of the rear compartment, behind the LH seat	**Entertainment Component Views** in Entertainment	**Entertainment Connector End Views** in Entertainment
Speaker - RR	RH side of the rear compartment, behind the RH seat	**Entertainment Component Views** in Entertainment	**Entertainment Connector End Views** in Entertainment
Speaker - RF Door	On the inside of the RH door, lower front corner	**Entertainment Component Views** in Entertainment	**Entertainment Connector End Views** in Entertainment
Star Connector #1	Instrument panel harness, serial data, LH side of the body control module (BCM)	**Data Link Communications Component Views** in Data Link Communications	**Data Link Communications Connector End Views** in Data Link Communications
Star Connector #2	Instrument panel harness, serial data, LH side of the body control module (BCM)	**Data Link Communications Component Views** in Data Link Communications	**Data Link Communications Connector End Views** in Data Link Communications
Starter	RH side of engine block	**Engine Electrical Component Views** in Engine Electrical	-
Steering Column Lock	RH side of the steering column, inside steering column shroud	**Steering Wheel and Column Component Views** in Steering Wheel and Column	**Inline Harness Connector End Views**
Steering Column Lock Relay	RH footwell, mounted to the toe board, above the body control module	**Steering Wheel and Column Component Views** in Steering Wheel and Column	**Steering Wheel and Column Connector End Views** in Steering Wheel and Column
Steering Wheel Position Sensor	Base of the steering column, under the instrument panel	**Steering Controls Component Views** in Variable Effort Steering	**Steering Controls Connector End Views** in Variable Effort Steering
	Mounted on the bracket in	**Lighting Systems**	**Lighting Systems**

Stop Lamp Switch	front of the brake pedal	**Component Views** in Lighting Systems	**Connector End Views** in Lighting Systems
Sunload Sensor	On top of the instrument panel, RH side of the defroster grid	**HVAC Component Views** in HVAC Systems - Automatic	**HVAC Connector End Views** in HVAC Systems - Automatic
Suspension Damper - LF	Inside of the LF shock absorber	**Suspension Controls Component Views** in Electronic Suspension Controls	**Suspension Controls Connector End Views** in Electronic Suspension Controls
Suspension Damper - LR	Inside of the LR shock absorber	**Suspension Controls Component Views** in Electronic Suspension Controls	**Suspension Controls Connector End Views** in Electronic Suspension Controls
Suspension Damper - RF	Inside of the RF shock absorber	**Suspension Controls Component Views** in Electronic Suspension Controls	**Suspension Controls Connector End Views** in Electronic Suspension Controls
Suspension Damper - RR	Inside of the RR shock absorber	**Suspension Controls Component Views** in Electronic Suspension Controls	**Suspension Controls Connector End Views** in Electronic Suspension Controls
Suspension Position Sensor-LF	LH front wheelhouse rearward of the shock absorber	**Suspension Controls Component Views** in Electronic Suspension Controls	**Suspension Controls Connector End Views** in Electronic Suspension Controls
Suspension Position Sensor - LR	LH rear wheelhouse front of the control arm	**Suspension Controls Component Views** in Electronic Suspension Controls	**Suspension Controls Connector End Views** in Electronic Suspension Controls
Suspension Position Sensor - RF	RH front wheelhouse rearward of the shock absorber	**Suspension Controls Component Views** in Electronic Suspension Controls	**Suspension Controls Connector End Views** in Electronic Suspension Controls
Suspension Position Sensor - RR	RH rear wheelhouse front of the control arm	**Suspension Controls Component Views** in Electronic Suspension Controls	**Suspension Controls Connector End Views** in Electronic Suspension Controls
Tail/Stop Lamp - Left (Export)	Rear of the vehicle, LH side	**Lighting Systems Component Views** in Lighting Systems	**Lighting Systems Connector End Views** in Lighting Systems
Tail/Stop Lamp - Right (Export)	RH side rear of the vehicle	**Lighting Systems Component Views** in Lighting Systems	**Lighting Systems Connector End Views** in Lighting Systems
Tail/Stop and Turn Signal Lamp - Left (Domestic)	Rear of the vehicle, LH side	**Lighting Systems Component Views** in	**Lighting Systems Connector End Views**

		Lighting Systems	in Lighting Systems
Tail/Stop and Turn Signal Lamp - Right (Domestic)	Rear of the vehicle, RH side	**Lighting Systems Component Views** in Lighting Systems	**Lighting Systems Connector End Views** in Lighting Systems
Telescoping Sensor	RH side of steering column, above telescoping drive motor	**Steering Wheel and Column Component Views** in Steering Wheel and Column	**Inline Harness Connector End Views**
Telescoping Actuator Switch	RH side of steering column	**Steering Wheel and Column Component Views** in Steering Wheel and Column	**Inline Harness Connector End Views**
Telescoping Drive Motor	RH side of steering column base	**Steering Wheel and Column Component Views** in Steering Wheel and Column	**Inline Harness Connector End Views**
Theft Deterrent Relay	RH footwell, mounted to the toe board, above the body control module	**Theft Deterrent System Component Views** in Theft Deterrent	**Theft Deterrent System Connector End Views** in Theft Deterrent
Throttle Actuator Control (TAC) Module	Behind the RF fender, between the wheelhouse and the dash panel, below the battery, attached to the powertrain control module (PCM)	**Engine Controls Component Views** in Engine Controls-5.7L	**Engine Controls Connector End Views** in Engine Controls-5.7L
Throttle Actuator Control (TAC) Motor	LH side of the throttle body	**Engine Controls Component Views** in Engine Controls-5.7L	**Engine Controls Connector End Views** in Engine Controls-5.7L
Throttle Position (TP) Sensor	RH side of the throttle body	**Engine Controls Component Views** in Engine Controls-5.7L	**Engine Controls Connector End Views** in Engine Controls-5.7L
Tire Pressure Monitor Sensor - LR	Inside LR wheel, part of the valve stem	**Tire Pressure Monitoring System Component Views** in Tire Pressure Monitoring	-
Tire Pressure Monitor Sensor-LF	Inside LF wheel, part of the valve stem	**Tire Pressure Monitoring System Component Views** in Tire Pressure Monitoring	-
		Tire Pressure	

Tire Pressure Monitor Sensor - RF	Inside RF wheel, part of the valve stem	**Monitoring System Component Views** in Tire Pressure Monitoring	-
Tire Pressure Monitor Sensor - RR	Inside RR wheel, part of the valve stem	**Tire Pressure Monitoring System Component Views** in Tire Pressure Monitoring	-
Torque Converter Clutch Pulse Width Modulation Solenoid (TCC PWM SOL) Valve	Inside the automatic transmission	**Automatic Transmission Electronic Component Views** in Automatic Transmission-4L60-E/4L65-E	**Automatic Transmission Internal Connector End Views** in Automatic Transmission-4L60-E/4L65-E
Torque Converter Clutch (TCC) Solenoid Valve	Inside the automatic transmission	**Automatic Transmission Electronic Component Views** in Automatic Transmission-4L60-E/4L65-E	**Automatic Transmission Internal Connector End Views** in Automatic Transmission-4L60-E/4L65-E
Traction/Suspension Control Switch	Center console, between the shifter and the storage compartment	**ABS Component Views** in Antilock Brake System	**ABS Connector End Views** in Antilock Brake System
Transmission Fluid Temperature (TFT) Sensor	Inside the transmission	**Manual Transmission Component Views** in Manual Transmission	**Manual Transmission Connector End Views** in Automatic Transmission-4L60-E/4L65-E
Turn Signal Lamp - RR (Export)	Rear of the vehicle, RH side	**Lighting Systems Component Views** in Lighting Systems	**Lighting Systems Connector End Views** in Lighting Systems
Turn Signal Lamp-LF (Export)	Lower front LH side of the vehicle	**Lighting Systems Component Views** in Lighting Systems	**Lighting Systems Connector End Views** in Lighting Systems
Turn Signal Lamp - LR (Export)	Rear of the vehicle, LH side	**Lighting Systems Component Views** in Lighting Systems	**Lighting Systems Connector End Views** in Lighting Systems
Turn Signal Lamp - RF (Export)	Lower front RH side of the vehicle	**Lighting Systems Component Views** in Lighting Systems	**Lighting Systems Connector End Views** in Lighting Systems
Underhood Lamp	Attached to the RH underside of the hood	**Lighting Systems Component Views** in Lighting Systems	**Lighting Systems Connector End Views** in Lighting Systems

Vacuum Control Assembly (CJ2)	RH side of the blower motor	**HVAC Component Views** in HVAC Systems - Automatic	**HVAC Connector End Views** in HVAC Systems - Automatic
Vanity Mirror Lamp - Left	Behind the LH sunshade	**Lighting Systems Component Views** in Lighting Systems	**Lighting Systems Connector End Views** in Lighting Systems
Vanity Mirror Lamp - Right	Behind the RH sunshade	**Lighting Systems Component Views** in Lighting Systems	**Lighting Systems Connector End Views** in Lighting Systems
Variable Effort Steering Actuator	Inside of the steering gear	**Steering Controls Component Views** in Variable Effort Steering	**Steering Controls Connector End Views** in Variable Effort Steering
Vehicle Speed Sensor (VSS)	Top RH side of the differential	**Manual Transmission Component Views** in Manual Transmission	**Manual Transmission Connector End Views** in Automatic Transmission-4L60-E/4L65-E
Wheel Speed Sensor (WSS)-LF	LF wheel between steering knuckle and brake rotor	**ABS Component Views** in Antilock Brake System	**ABS Connector End Views** in Antilock Brake System
Wheel Speed Sensor (WSS) - LR	Rear LH wheel between steering knuckle and brake rotor	**ABS Component Views** in Antilock Brake System	**ABS Connector End Views** in Antilock Brake System
Wheel Speed Sensor (WSS) - RF	Front RH wheel between steering knuckle and brake rotor	**ABS Component Views** in Antilock Brake System	**ABS Connector End Views** in Antilock Brake System
Wheel Speed Sensor (WSS) - RR	Rear RH wheel between steering knuckle and brake rotor	**ABS Component Views** in Antilock Brake System	**ABS Connector End Views** in Antilock Brake System
Window Motor - Driver	Behind the LH door trim panel, part of the window assembly	**Power Door Systems Component Views** in Doors	**Power Door Systems Connector End Views** in Doors
Window Motor - Passenger	Behind the RH door trim panel, part of the window assembly	**Power Door Systems Component Views** in Doors	**Power Door Systems Connector End Views** in Doors
Windshield Washer Fluid Pump	LH rear engine compartment, on the bottom front of the washer fluid reservoir	**Wiper/Washer System Component Views** in Wipers/Washer Systems	**Wiper/Washer System Connector End Views** in Wipers/Washer Systems
Windshield Washer Fluid Level Switch	Rear side of the washer fluid reservoir	**Wiper/Washer System Component Views** in Wipers/Washer	**Wiper/Washer System Connector End Views** in Wipers/Washer Systems

		Systems	
Windshield Wiper Motor	LH side of the plenum	**Wiper/Washer System Component Views** in Wipers/Washer Systems	**Wiper/Washer System Connector End Views** in Wipers/Washer Systems
Windshield Wiper/Washer Switch	RH stalk of the steering column	**Wiper/Washer System Component Views** in Wipers/Washer Systems	**Inline Harness Connector End Views**
YAW Rate Sensor	Mounted to the lower left instrument panel support bracket, under the HVAC control head	**ABS Component Views** in Antilock Brake System	**ABS Connector End Views** in Antilock Brake System
C100 (8 cavities)	Forward lamp harness to forward lamp jumper harness, RH skid bar in front of the horns	**Harness Routing Views**	**Inline Harness Connector End Views**
C102 (20 cavities)	Instrument panel harness to forward lamp harness, RH side rear of engine compartment	**Harness Routing Views**	**Inline Harness Connector End Views**
C105 (2 cavities)	Transmission harness to LF wheel speed sensor, mounted on the engine above the lower control arm	-	**Inline Harness Connector End Views**
C108 (2 cavities)	Transmission harness to RF wheel speed sensor, mounted on the engine above the lower control arm	-	**Inline Harness Connector End Views**
C109 (8 cavities)	LH ignition control module jumper harness to engine harness, top center of the valve cover	**Power and Grounding Component Views**	**Inline Harness Connector End Views**
C110 (8 cavities)	RH ignition control module jumper harness to engine harness, top center of the valve cover	**Power and Grounding Component Views**	**Inline Harness Connector End Views**
C112 (2 cavities)	Knock sensor (KS) jumper harness to engine harness, top rear of the engine mounted to the vacuum hose	**Power and Grounding Component Views**	**Inline Harness Connector End Views**
	Forward lamp harness to		

C113 (2 cavities)	underhood lamp jumper harness, right side of the lower radiator support	**Harness Routing Views**	**Inline Harness Connector End Views**
C140 (10 cavities) (W/O F55)	Transmission harness to forward lamp harness, RH side in engine compartment, below the battery	**Harness Routing Views**	**Inline Harness Connector End Views**
C140 (14 cavities) (W/ F55)	Transmission harness to forward lamp harness, RH side in engine compartment, below the battery	**Harness Routing Views**	**Inline Harness Connector End Views**
C142 (20 cavities)	Engine harness to transmission harness, RH side rear of engine compartment, below the battery	-	**Inline Harness Connector End Views**
C144 (20 cavities)	Engine harness to transmission harness, RH side rear of engine compartment, below the battery	-	**Inline Harness Connector End Views**
C146 (10 cavities)	Transmission harness to instrument panel harness, RH side rear of engine compartment, below the battery	-	**Inline Harness Connector End Views**
C148 (10 cavities)	Transmission harness to forward lamp harness, RH side rear of engine compartment, below the battery	**Harness Routing Views**	**Inline Harness Connector End Views**
C150 (20 cavities)	Forward lamp harness to engine harness, RH side rear of engine compartment, below the battery	**Harness Routing Views**	**Inline Harness Connector End Views**
C152 (3 cavities)	Forward lamp harness to brake fluid pressure sensor jumper harness, LH side of engine compartment on left fender well	**Harness Routing Views**	**Inline Harness Connector End Views**
C200 (6 cavities)	Instrument panel harness to RH door harness, in the rubber grommet on the RH door	**Power and Grounding Component Views**	**Inline Harness Connector End Views**
	Instrument panel harness to LH door harness, in the	**Power and Grounding**	**Inline Harness**

C201 (6 cavities)	rubber grommet on the LH door	**Component Views**	**Connector End Views**
C202 (10 cavities)	Instrument panel harness to RH door harness, in the rubber grommet on the RH door	**Power and Grounding Component Views**	**Inline Harness Connector End Views**
C203 (10 cavities)	Instrument panel harness to LH door harness, in the rubber grommet on the LH door	**Power and Grounding Component Views**	**Inline Harness Connector End Views**
C204 (4 cavities)	Instrument panel harness to front body harness, Right of the fuse block - I/P. Mounted to toe board behind the carpet	**Harness Routing Views**	**Inline Harness Connector End Views**
C207 (4 cavities)	Instrument panel harness to steering column harness, LH side of the steering column, attached to the lower instrument panel bar - for steering column lock	**Power and Grounding Component Views**	**Inline Harness Connector End Views**
C208 (3 cavities)	Instrument panel harness to steering column harness, LH side of the steering column attached to the instrument panel lower beam	-	**Inline Harness Connector End Views**
C209 (23 cavities)	Instrument panel harness to steering column harness, LH side of the steering column, attached to the lower instrument panel bar - headlamp and turn signal switches	**Power and Grounding Component Views**	**Inline Harness Connector End Views**
C210 (2 cavities)	Instrument panel harness to steering column harness, LH side of the steering column attached to the instrument panel lower beam	-	**Inline Harness Connector End Views**
C211 (2 cavities)	Instrument panel to inflatable restraint steering wheel module coil, LH side of the steering column, attached to the lower instrument panel bar	**Power and Grounding Component Views**	**Inline Harness Connector End Views**

C212 (3 cavities)	Instrument panel harness to steering column harness, LH side of the steering column attached to the instrument panel lower beam	-	**Inline Harness Connector End Views**
C213 (2 cavities)	Instrument panel harness, taped to the instrument panel harness near the BOSE(R) signal processor	**Power and Grounding Component Views**	**Inline Harness Connector End Views**
C215 (10 cavities)	Instrument panel harness to hazard warning switch jumper harness, behind the hazard warning switch	-	**Inline Harness Connector End Views**
C217 (4 cavities)	Instrument panel harness to steering column harness, LH side of the steering column, attached to the lower instrument panel bar	**Power and Grounding Component Views**	**Inline Harness Connector End Views**
C219 (6 cavities)	Instrument panel harness to steering column harness, LH side of the steering column attached to the instrument panel lower beam	**Power and Grounding Component Views**	**Inline Harness Connector End Views**
C220 (8 cavities)	Instrument panel harness to vanity mirror jumper	-	**Inline Harness Connector End Views**
C301 (6 cavities)	Instrument panel harness to LH seat harness, under LH seat	**Power and Grounding Component Views**	**Inline Harness Connector End Views**
C302 (6 cavities)	Front body harness to RH seat harness, under RH seat	**Harness Routing Views**	**Inline Harness Connector End Views**
C303 (8 cavities)	Instrument panel harness to LH seat harness, under LH seat	-	**Inline Harness Connector End Views**
C400 (8 cavities)	Transmission harness to rear body harness, RR wheelhouse, rear of the control arm	**Harness Routing Views**	**Inline Harness Connector End Views**
C402 (10 cavities)	Transmission harness to fuel tank jumper harness	**Harness Routing Views**	**Inline Harness Connector End Views**
C403 (2 cavities)	Transmission harness to LR suspension damper jumper harness, mounted to the frame below the shock	-	**Inline Harness Connector End Views**

	absorber		
C406 (2 cavities)	Transmission harness to RR suspension damper jumper harness, mounted to the frame below the shock absorber	-	**Inline Harness Connector End Views**
C410 (1 cavity)	Front body harness to antenna/defogger jumper harness	**Harness Routing Views**	**Inline Harness Connector End Views**
C412 (4 cavities)	Fuel Tank Jumper Harness to Left Fuel Tank Harness	**Harness Routing Views**	**Inline Harness Connector End Views**
C414 (6 cavities)	Fuel Tank Jumper Harness to Right Fuel Tank Harness	**Harness Routing Views**	**Inline Harness Connector End Views**
G101	Forward lamp harness, on LH frame rail, near brake pressure modulator valve (BPMV) (CKT 150)	**Power and Grounding Component Views**	-
G102	Forward lamp harness, on the top of the RH frame rail, behind the RH headlamp assembly, ground for SP100 (CKT 250)	**Power and Grounding Component Views**	-
G103	Forward lamp harness, on LH frame rail, near brake pressure modulator valve (BPMV) (CKT 1250)	**Power and Grounding Component Views**	-
G104	Instrument panel harness, below the battery tray, on the RH frame rail, ground for SP208 (CKT 851)	**Power and Grounding Component Views**	-
G105	Engine harness, LH side bottom of engine, ground for SP122 (CKT 150)	**Power and Grounding Component Views**	-
G106	Engine harness, RH side of the engine, above the starter (CKT 451)	-	-
G107	Engine harness, LH side top, rear of engine (CKT 151)	**Power and Grounding Component Views**	-
G108	Forward lamp harness, below the battery tray on the frame rail (CKT 1251)	**Power and Grounding Component Views**	-
G201	Instrument panel harness, at base of LH A-Pillar, ground for SP201 and SP203 (CKT	**Power and Grounding Component Views**	-

	150 and CKT 351)		
G205	Instrument panel harness, behind the LH seat, at the antenna module (CKT 150)	**Power and Grounding Component Views**	-
G301	Front body harness, behind the LH seat, at the antenna module (CKT 350)	**Power and Grounding Component Views**	-
G302	Front body harness, on the RH BP-Pillar, ground for SP302 (CKT 150)	**Power and Grounding Component Views**	-
G401	Transmission harness, rear of the vehicle, on the inner side of the LH frame rail (CKT 150)	**Power and Grounding Component Views**	-
G402	Transmission harness, rear of the vehicle, on the inner side of RH frame rail (CKT 1351 and CKT 1251)	**Power and Grounding Component Views**	-
P200	Instrument panel harness, RH side of instrument panel on dash panel	**Harness Routing Views**	-
P201	Instrument panel harness, LH side of Instrument panel in A-Pillar	**Harness Routing Views**	-
P202	Instrument panel harness, RH side of instrument panel in A-Pillar	**Harness Routing Views**	-
P203	Instrument panel harness, LH side of instrument panel (for windshield motor)	**Harness Routing Views**	-
P401	Transmission harness, LH rear of vehicle	**Harness Routing Views**	-
P501	In front of the LH door	**Harness Routing Views**	-
P600	In front of the RH door	**Harness Routing Views**	-
S100	RH ignition control module jumper, approximately 6.0 cm (2.3 in) from connector C110 breakout (CKT 151)	-	-
S101	LH ignition control module jumper, approximately 6.0 cm (2.3 in) from connector C109 breakout (CKT 151)	-	-
	RH ignition control module		

S102	jumper, approximately 5.0 cm (1.9 in) from breakout for connector C110 (CKT 39)	-	-
S103	LH ignition control module jumper, approximately 5.0 cm (1.9 in) from breakout for connector C109 (CKT 39)	-	-
S104	RH ignition control module jumper, approximately 4.0 cm (1.5 in) from breakout for ignition coil/module 4 (CKT 2129)	-	-
S105	LH ignition control module jumper, approximately 4.0 cm (1.5 in) from breakout for ignition coil/module 5 (CKT 2129)	-	-
S106	Forward lamp harness, approximately 12.5 cm (4.9 in) from the EBCM connector breakout (CKT 556)	**Harness Routing Views**	-
S107	Forward lamp harness, approximately 20 cm (7.9 in) from the EBCM connector breakout (CKT 20)	**Harness Routing Views**	-
S108	Forward lamp harness, approximately 6.0 cm (2.3 in) from EBCM connector breakout (CKT 1056)	**Harness Routing Views**	-
S109	Forward lamp harness, approximately 10.0 cm (3.9 in) from A/C Compressor Clutch connector breakout (CKT 59)	-	-
S110	Engine harness, approximately 39.0 cm (15.3 in) from the main harness in the branch leading to the powertrain control module (PCM) connectors (CKT 451)	-	-
	Engine harness,		

S112	approximately 6.0 cm (2.3 in) from the camshaft position sensor breakout (CKT 150)	-	-
S120	Engine harness, approximately 11.5 cm (4.5 in) from the main harness in the branch leading to the powertrain control module (PCM) connectors (CKT 451)	-	-
S200	Instrument panel harness, approximately 22.5 cm (8.8 in) from the inside rearview mirror breakout (CKT 640)	-	-
S201 (CJ2)	Instrument panel harness, approximately 35.0 cm (13.7 in) from the HVAC control head connector (CKT 1791)	-	-
S202	Instrument panel harness, approximately 39.5 cm (15.5 in) from the inside rearview mirror breakout (CKT 150)	-	-
S203	Instrument panel harness, approximately 6 cm (2.4 in) from the connector breakout for the BCM (CKT 1640)	-	-
S204	Engine harness, approximately 6.5 cm (2.5 in) from the C150 breakout (CKT 817)	-	-
S205	Instrument panel harness, approximately 6.5 cm (2.5 in) from the data link connector (DLC) breakout (CKT 9)	-	-
S206	Instrument panel harness, approximately 5 cm (1.9 in) from the blower motor control module connector breakout (CKT 1132)	-	-
S208	Instrument panel harness, approximately 32.5 cm (12.7 in) from the radio	-	-

	connectors (CKT 145)		
S210	Instrument panel harness, approximately 10.0 cm (3.9 in) from the blower motor control module breakout (CKT 159)	-	-
S212	Instrument panel harness, approximately 22.5 cm (8.8 in) from the electronic accessory plug connector	-	-
S213	Instrument panel harness, approximately 7.5 cm (2.9 in) right of the brake switch connectors breakout (CKT 339)	-	-
S215 (CJ2)	Instrument panel harness, approximately 6.5 cm (2.5 in) left of the inflatable restraint instrument panel module breakout (CKT 1798)	-	-
S300 - IDC	RH power seat harness, approximately 4.0 cm (1.5 in) from the breakout for the RH seat relay center connector C1 (CKT 1140)	-	-
S301 - IDC	LH power seat harness, approximately 2.5 cm (0.9 in) from the breakout for C301 (CKT 150)	-	-
S302	Front body harness, approximately 12.0 cm (4.7 in) from the RH rear speaker breakout (CKT 383)	**Harness Routing Views**	-
S303	Front body harness, approximately 15.0 cm (5.9 in) from the RH rear speaker breakout (CKT 740)	**Harness Routing Views**	-
S304	Front body harness, approximately 22.5 cm (8.8 in) from the RH rear speaker breakout, toward RH rear compartment lamp (CKT 744)	**Harness Routing Views**	-

S308	Instrument panel harness, approximately 19.0 cm (7.4 in) from the yaw rate connector (CKT 556)	-	-
S310	Instrument panel harness, approximately 11.0 cm (4.3 in) from the yaw rate connector (CKT 1056)	-	-
S312	Front body harness, rear defogger capacitor, approximately 20.0 cm (7.8 in) from the SP302 breakout (CKT 293 and CKT 899)	**Harness Routing Views**	-
S314	Front body harness, rear defogger capacitor, approximately 20.0 cm (7.8 in) from the SP302 breakout (CKT 2050 and CKT 899)	**Harness Routing Views**	-
S391	LH power seat harness, under the seat base	-	-
S392	LH power seat harness, under the seat base	-	-
S400	Transmission harness, approximately 6.5 cm (2.5 in) from the C402 breakout (CKT 339)	-	-
S402	Transmission harness, approximately 55.0 cm (21.6 in) from RR shock absorber breakout (CKT 150)	-	-
S408	Fuel tank jumper harness, approximately 6.5 cm (2.5 in) from the C402 breakout (CKT 150)	-	-
S410	Fuel tank jumper harness, approximately 81.5 cm (32 in) from C408 breakout (CKT 720)	-	-
S412	Right side fuel tank harness, approximately 22.5 cm (8.9 in) from C414 breakout (CKT 808)	-	-

S420 (Europe)	Rear body harness, approximately 6.5 cm (2.5 in) from the C400 breakout (CKT 122)	**Harness Routing Views**	-
S480 (Japan/Europe)	Rear body harness, approximately 3.5 cm (1.3 in) from the splice pack 400 breakout (CKT 9)	**Harness Routing Views**	-
S481 (Japan/Domestic)	Rear body harness, approximately 6.5 cm (2.5 in) from the LH backup lamp connector breakout (CKT 18)	**Harness Routing Views**	-
S482	Rear body harness, approximately 21.5 cm (8.4 in) left of the splice pack 400 breakout (CKT 24)	**Harness Routing Views**	-
S483 (Japan/Europe)	Rear body harness, approximately 6.5 cm (2.5 in) from the LH back up lamp connector breakout (CKT 9)	**Harness Routing Views**	-
S484 (Domestic)	Rear body harness, approximately 8.0 cm (3.1 in) left of the splice pack 400 breakout (CKT 24)	**Harness Routing Views**	-
S485 (Japan)	Rear body harness, approximately 5 cm (1.9 in) from LR license lamp breakout (CKT 150)	**Harness Routing Views**	-
S490 (Japan/Europe)	Rear body harness, approximately 13.0 cm (5.1 in) from the C400 breakout (CKT 820)	**Harness Routing Views**	-
S492 (Domestic)	Rear body harness, approximately 6.5 cm (2.5 in) from the RH turn signal breakout (CKT 19)	**Harness Routing Views**	-
S494 (Japan/Europe)	Rear body harness, approximately 6.5 cm (2.5 in) from the RH turn signal breakout (CKT 9)	**Harness Routing Views**	-
S496 (Japan)	Rear body harness, approximately 6.5 cm (2.5 in) from the C400 breakout (CKT 19)	**Harness Routing Views**	-

S498 (Japan)	Rear body harness, at the RR backup lamp breakout (CKT 150)	**Harness Routing Views**	-
S501 - IDC	LH door harness, approximately 6.0 cm (2.3 in) from the outside rearview mirror connector breakout, toward P501 (CKT 360)	-	-
S503	Antenna/Defogger jumper harness, approximately 10.0 cm (3.9 in) from C2 of the rear defogger (CKT 350)	-	-
S505	Antenna/Defogger jumper harness, approximately 32.0 cm (12.6 in) from C2 of the radio antenna module (CKT 350)	-	-
S507	Antenna/Defogger jumper harness, approximately 20.0 cm (7.9 in) from the C 410 breakout (CKT 293)	-	-
S509	Antenna/Defogger jumper harness, approximately 20.0 cm (7.9 in) from C1 of the rear defogger (CKT 293)	-	-
S600 - IDC	RH door harness, approximately 6.0 cm (2.3 in) from the outside rearview mirror connector breakout, toward P600 (CKT 360)	-	-
Splice Pack, SP100	Forward lamp harness, grounded to G102, at the RH headlamp opening door assembly connector breakout (CKT 150)	**Power and Grounding Component Views**	**Splice Pack Connector End Views**
Splice Pack, SP101	Forward lamp harness, grounded to G101, on LH frame rail, near brake pressure modulator valve (BPMV) (CKT 150)	**Power and Grounding Component Views**	**Splice Pack Connector End Views**
Splice Pack, SP102	Forward lamp jumper, taped to harness approximately 10.0 cm (3.9 in) left of C100, grounded	**Power and Grounding Component Views**	**Splice Pack Connector End Views**

	to G102 (CKT 150)		
Splice Pack, SP201	Instrument panel harness, grounded to G201 (CKT 150)	**Power and Grounding Component Views**	**Splice Pack Connector End Views**
Splice Pack, SP202	Instrument panel harness, grounded to G202 (CKT 150)	**Power and Grounding Component Views**	**Splice Pack Connector End Views**
Splice Pack, SP203	Instrument panel harness, grounded to G201 (CKT 351)	**Power and Grounding Component Views**	**Splice Pack Connector End Views**
Splice Pack, SP208	Instrument panel harness, RH side of instrument panel, grounded to G104 (CKT 851)	**Power and Grounding Component Views**	**Splice Pack Connector End Views**
Splice Pack, SP302	Front body harness, approximately 83.5 cm (33.4 in) from RH power seat breakout (C302), grounded to G302 (CKT 150)	**Power and Grounding Component Views**	**Splice Pack Connector End Views**
Splice Pack, SP400	Rear body harness, taped back to harness between RR backup lamp and RR tail/stop lamp breakout, grounded to G401 (CKT 150)	**Power and Grounding Component Views**	**Splice Pack Connector End Views**
Splice Pack, SP402 (Export)	Rear body harness, taped back to harness between auto fuse and RR license lamp breakout, grounded to G401 (CKT 150)	**Power and Grounding Component Views**	**Splice Pack Connector End Views**

POWER AND GROUNDING COMPONENT VIEWS

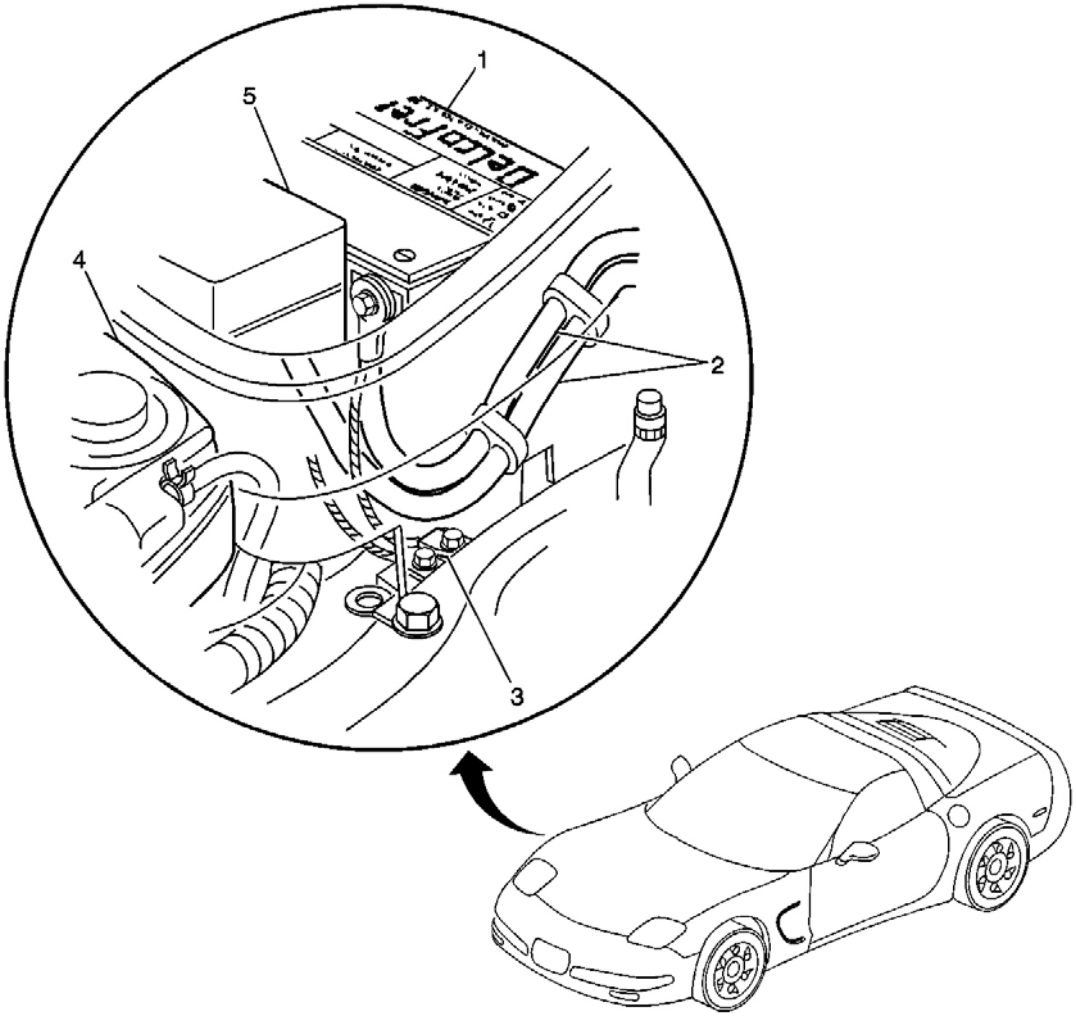

Fig. 74: Engine Compartment Under The Battery Component View
Courtesy of GENERAL MOTORS CORP.

Callouts For Fig. 74

Callout	Component Name
1	Battery
2	Battery Cables
3	G104
4	Engine Coolant Reservoir
5	Fuse Block-Underhood

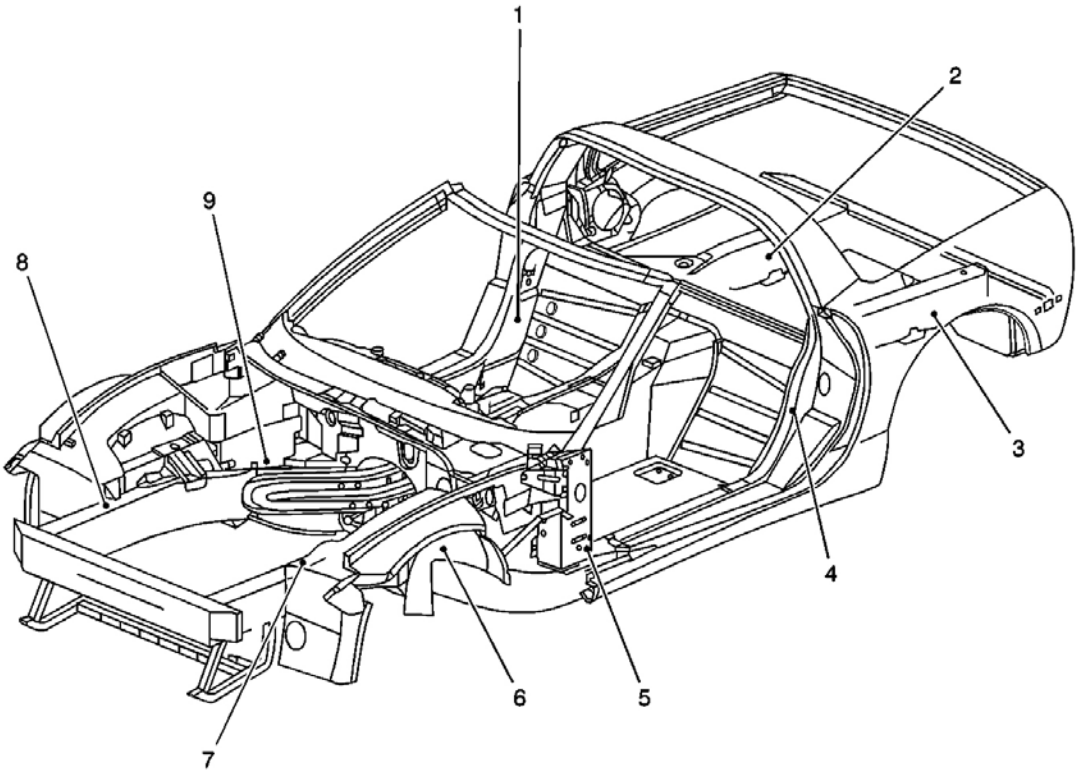

Fig. 75: View of Vehicle Without Body Panels Component View
Courtesy of GENERAL MOTORS CORP.

Callouts For Fig. 75

Callout	Component Name
1	G302
2	G402
3	G401
4	G205 and G301
5	G201
6	Grounding Point for Engine Ground Strap
7	G101
8	G102
9	G104 and G108

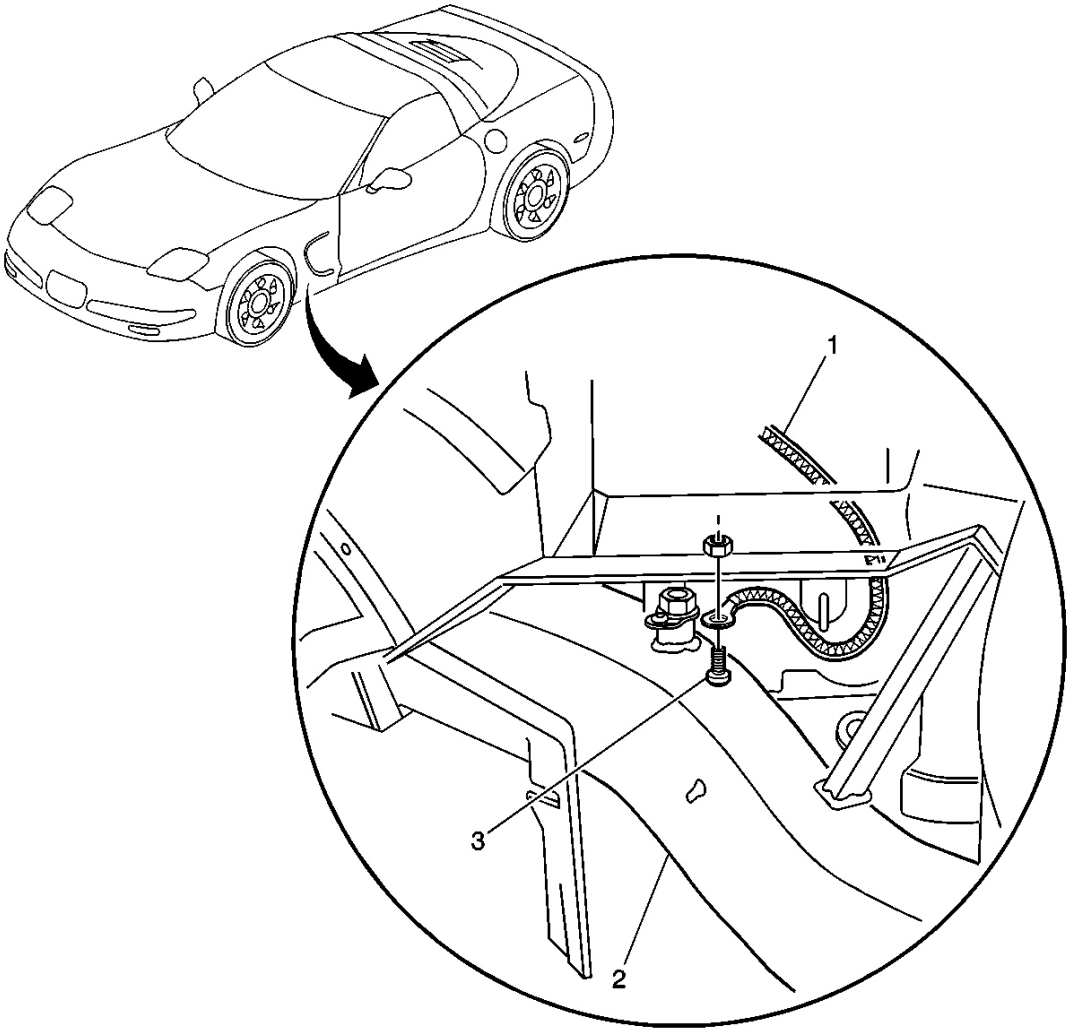

Fig. 76: Behind The Lf Wheel Component View
Courtesy of GENERAL MOTORS CORP.

Callouts For Fig. 76

Callout	Component Name
1	Engine Grounding Strap
2	Frame Rail-LH
3	Engine Grounding Strap Location

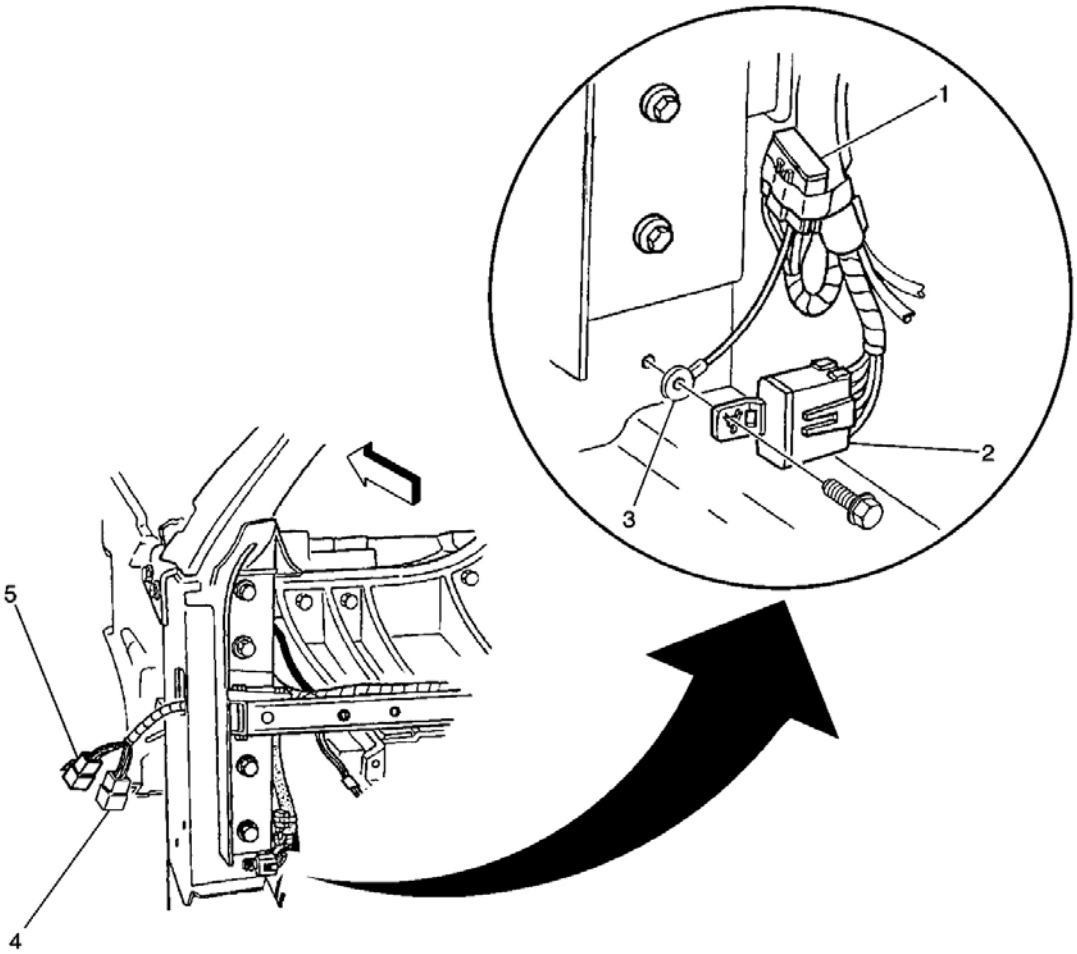

Fig. 77: Bottom of the A-Pillar Component View - LF
Courtesy of GENERAL MOTORS CORP.

Callouts For Fig. 77

Callout	Component Name
1	SP203
2	SP201
3	G201
4	C203
5	C201

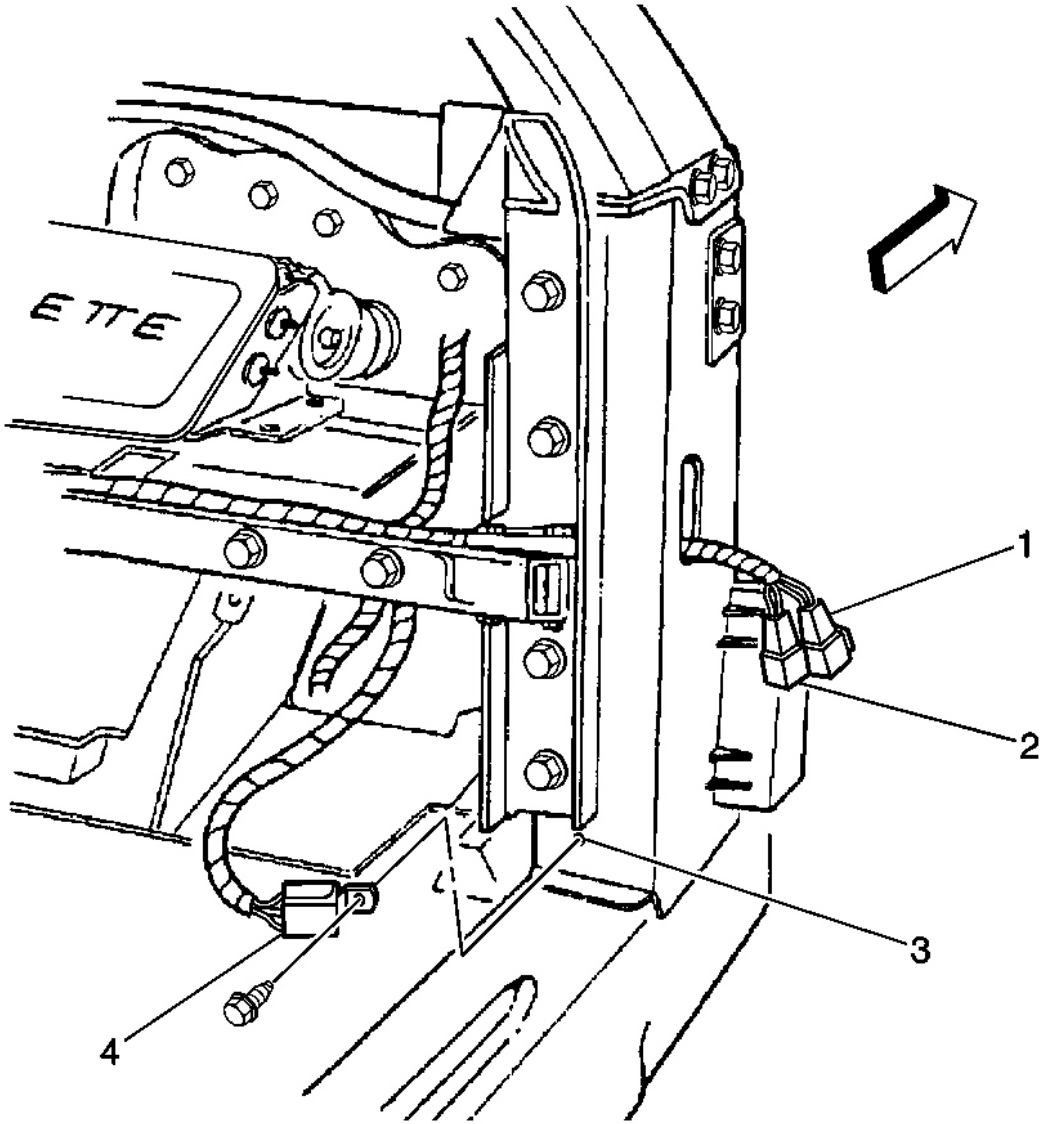

Fig. 78: Bottom of the A-Pillar Component View - RF
Courtesy of GENERAL MOTORS CORP.

Callouts For Fig. 78

Callout	Component Name
1	C202
2	C200
3	G202
4	SP202

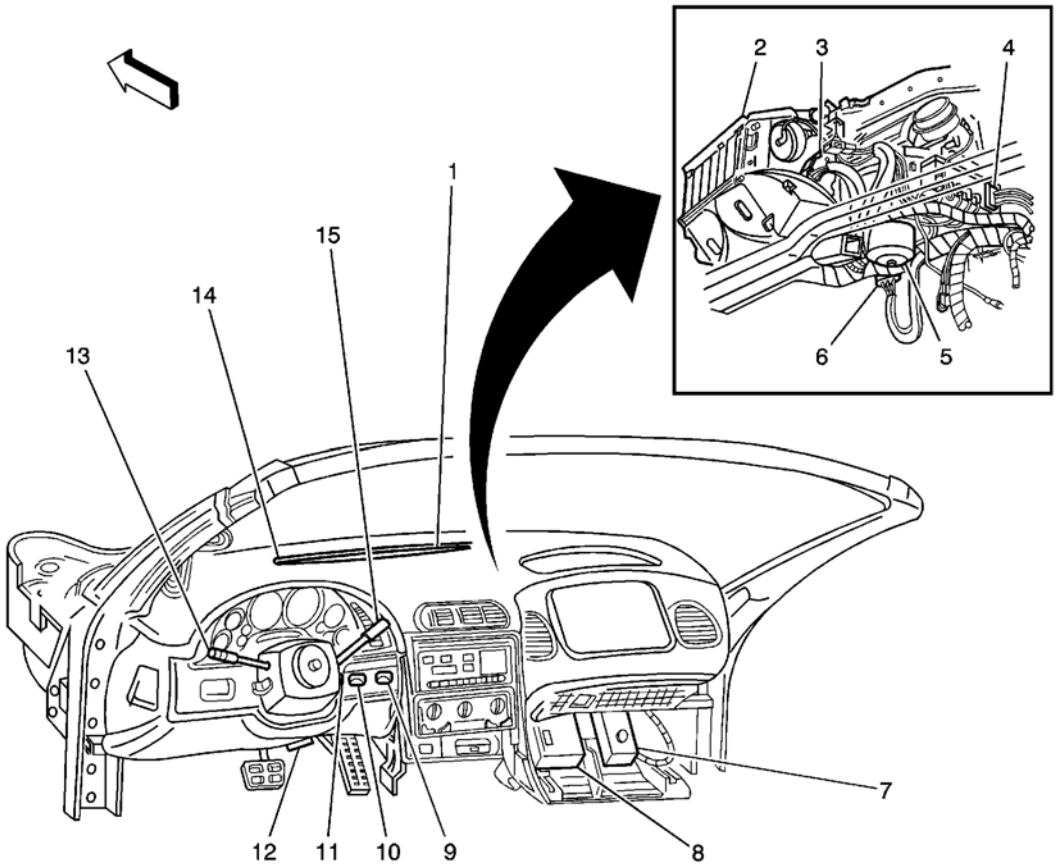

Fig. 79: Instrument Panel Component View
Courtesy of GENERAL MOTORS CORP.

Callouts For Fig. 79

Callout	Component Name
1	Sunload Sensor
2	HVAC Module Assembly
3	Air Temperature Actuator (C60)
4	Vacuum Control Assembly (CJ2)
5	Blower Motor
6	Blower Motor Control Processor
7	Fuse Block-IP
8	Body Control Module (BCM)
9	Ignition Switch
10	Air Temperature Sensor - Inside
11	Telescoping Actuator Switch

12	Data Link Connector (DLC)
13	Multifunction Turn Signal Lever
14	Ambient Light Sensor
15	Windshield Wiper/Washer Switch

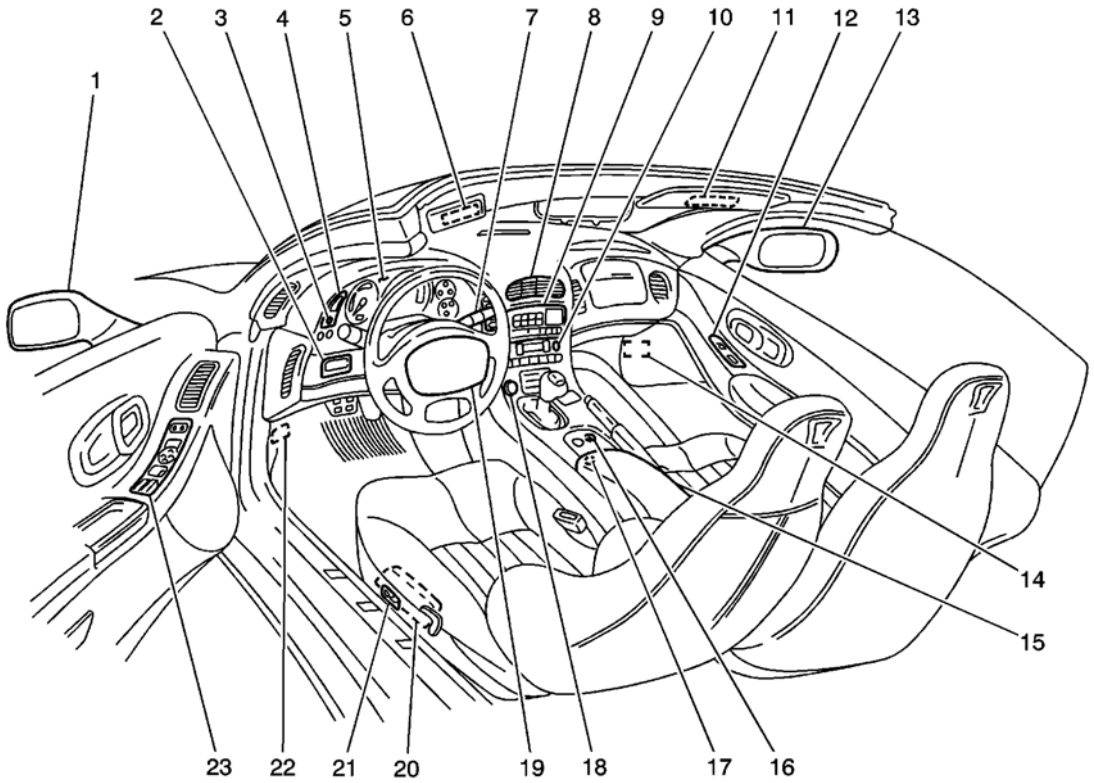

Fig. 80: Cockpit Component View
Courtesy of GENERAL MOTORS CORP.

Callouts For Fig. 80

Callout	Component Name
1	Outside Rearview Mirror-Driver
2	Fog Lamp/Rear Compartment Lid Release Switch (Domestic), Fog Lamp Switch (Export)
3	Dimmer Switch
4	Dimmer/Head Up Display (HUD) Switch
5	Instrument Panel Cluster (IPC)
6	Vanity Mirror Lamp-Left
7	Driver Information Center (DIC) Switch-Right
8	Hazard Switch
9	Radio
10	HVAC Control Module

11	Vanity Mirror Lamp-Right
12	Door Switch-Passenger
13	Outside Rearview Mirror-Passenger
14	Footwell Courtesy Lamp-Right
15	Fuel Door Lock Release Switch (Domestic), Rear Compartment Lid/Fuel Door Lock Release Switch (Export)
16	Traction/Suspension Control Switch
17	Auxiliary Power Outlet Connector
18	Cigar Lighter
19	Horn Switch
20	Seat Control Module (SCM)-Driver (W/Memory Seats), Seat Relay Center-Driver (W/O Memory Seats)
21	Seat Adjuster Switch-Driver
22	Footwell Courtesy Lamp-Left
23	Door Switch-Driver

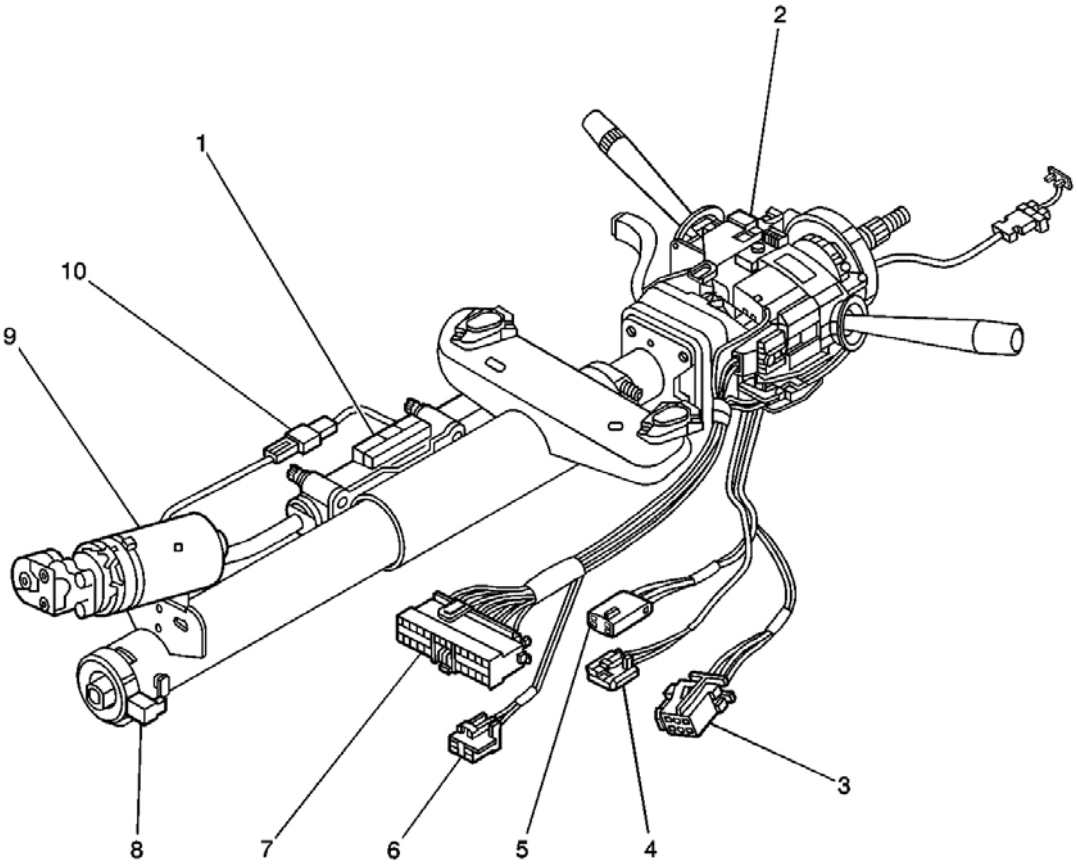

Fig. 81: Steering Column Component View
Courtesy of GENERAL MOTORS CORP.

Callouts For Fig. 81

Callout	Component Name
1	Telescoping Sensor
2	Steering Column Lock
3	C219
4	C207
5	C211
6	C217
7	C209
8	Steering Wheel Position Sensor
9	Telescoping Drive Motor
10	C210

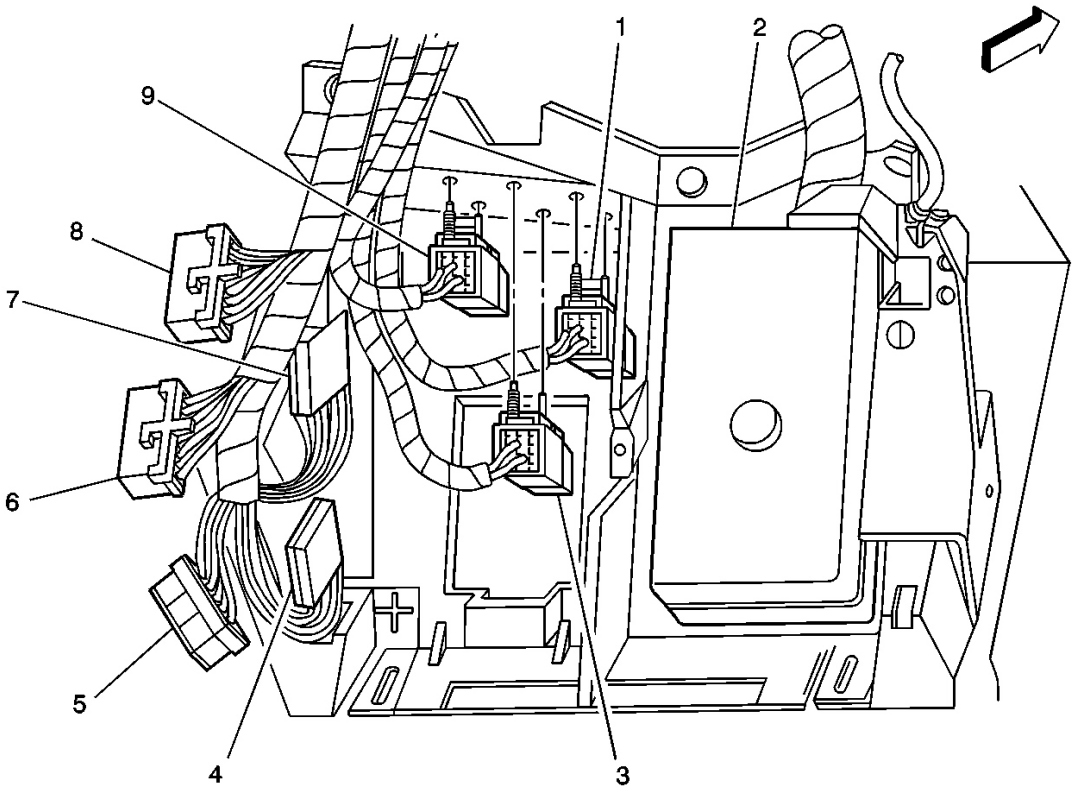

Fig. 82: Under RH Side Of Dash Component View
Courtesy of GENERAL MOTORS CORP.

Callouts For Fig. 82

Callout	Component Name
1	Theft Deterrent Relay

2	Fuse Block-IP
3	Blower Motor Relay
4	Star Connector #2
5	Body Control Module (BCM) C3
6	Body Control Module (BCM) C1
7	Star Connector #1
8	Body Control Module (BCM) C2
9	Steering Column Lock Relay

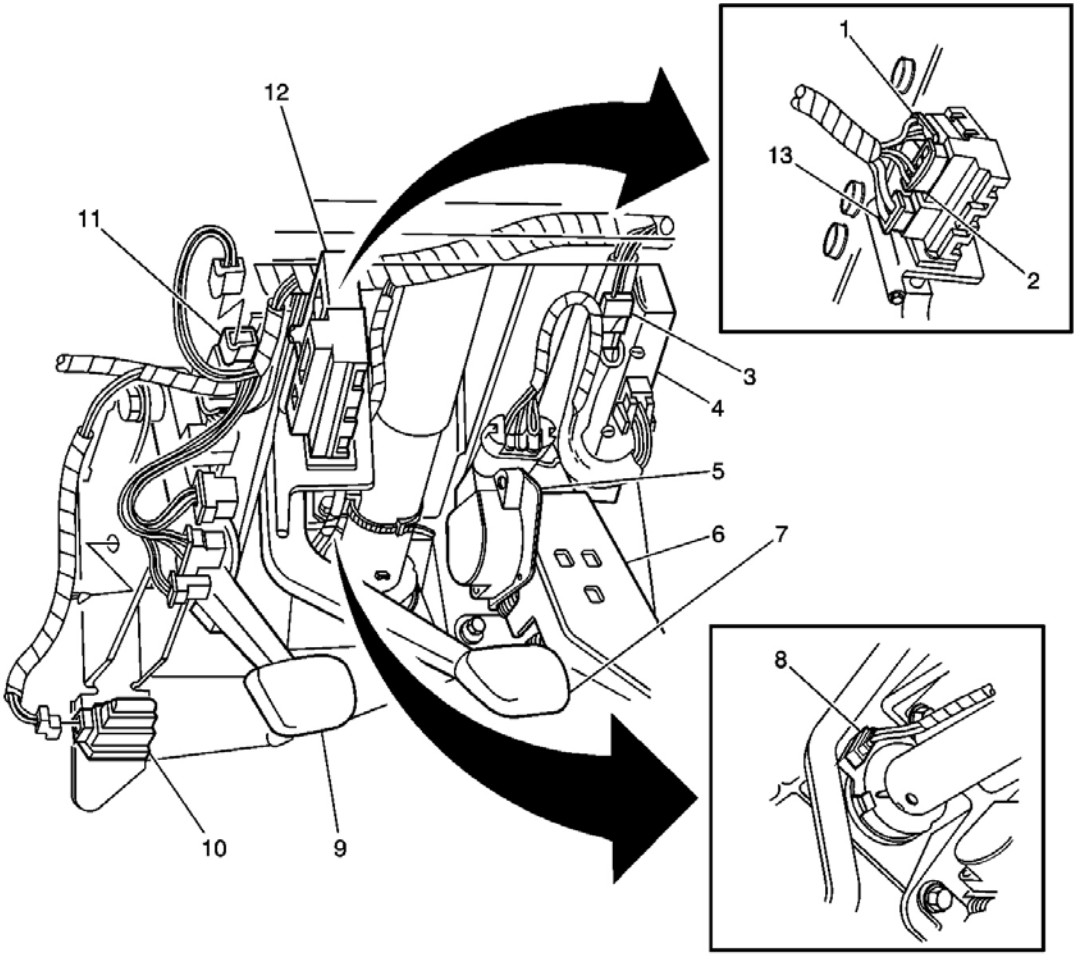

Fig. 83: Under Side Of The Dash Component View - Left
Courtesy of GENERAL MOTORS CORP.

Callouts For Fig. 83

Callout	Component Name
1	Stop Lamp Switch C1

2	Stop Lamp Switch C3
3	C213
4	Bose Signal Processor
5	Accelerator Pedal Position (APP) Sensor
6	Accelerator Pedal
7	Brake Pedal
8	Steering Wheel Position Sensor
9	Clutch Pedal
10	Clutch Pedal Start Switch
11	Clutch Pedal Position Switch
12	Stop Lamp Switch
13	Stop Lamp Switch Connector C2

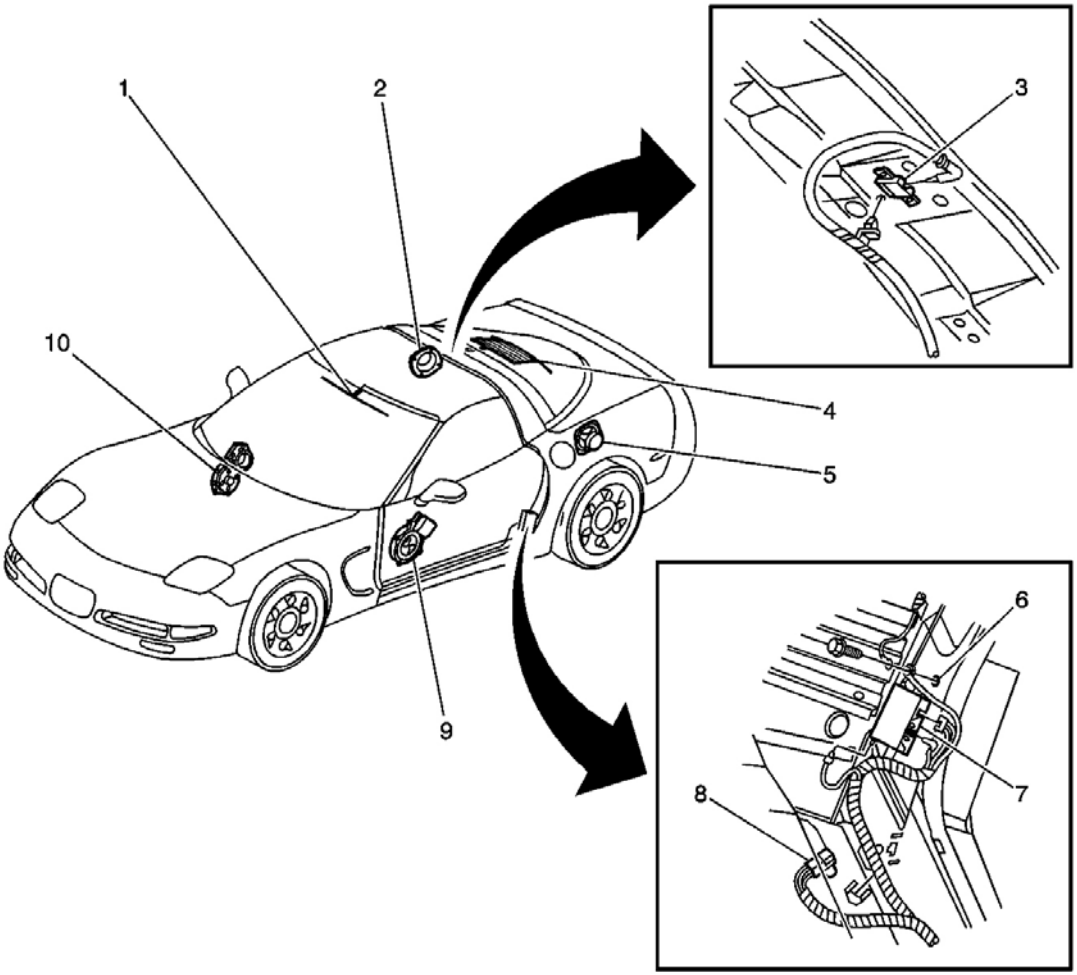

Fig. 84: Speakers And Antennas Component View

Courtesy of GENERAL MOTORS CORP.

Callouts For Fig. 84

Callout	Component Name
1	Front Window Antenna
2	Speaker-RR
3	Antenna Buffer
4	Rear Window Antenna
5	Speaker-LR
6	G205
7	Radio Antenna Module (Coupe)
8	C301
9	Speaker-LF Door
10	Speaker-RF Door

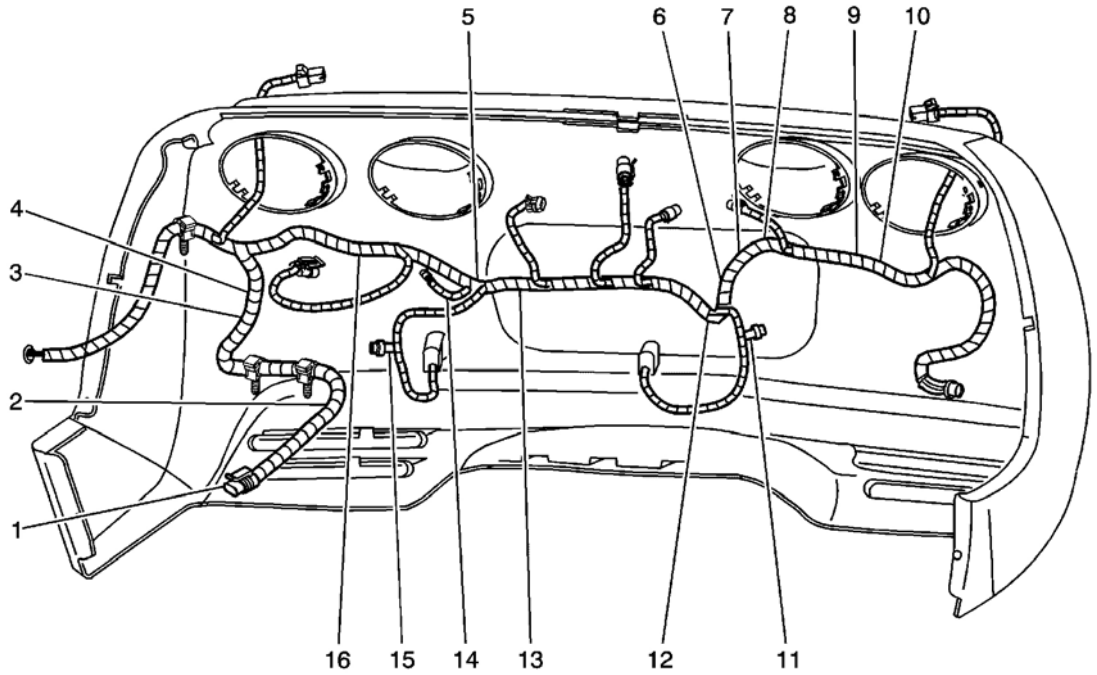

Fig. 85: Body Rear End Harness Routing Component View
Courtesy of GENERAL MOTORS CORP.

Callouts For Fig. 85

Callout	Component Name
1	C400
2	S420 - Europe
3	S496 - Japan

4	S490 - Japan/Europe
5	S485 - Japan
6	S482
7	S484 - Domestic
8	S480 - Japan/Europe
9	S492 - Domestic
10	S494 - Japan/Europe
11	License Lamp Inline Fuse-RH (Export)
12	S498
13	S483 - Japan/Europe
14	S481 - Japan/Domestic
15	License Lamp Inline Fuse-LH (Export)
16	Sp400, Sp402 - Export

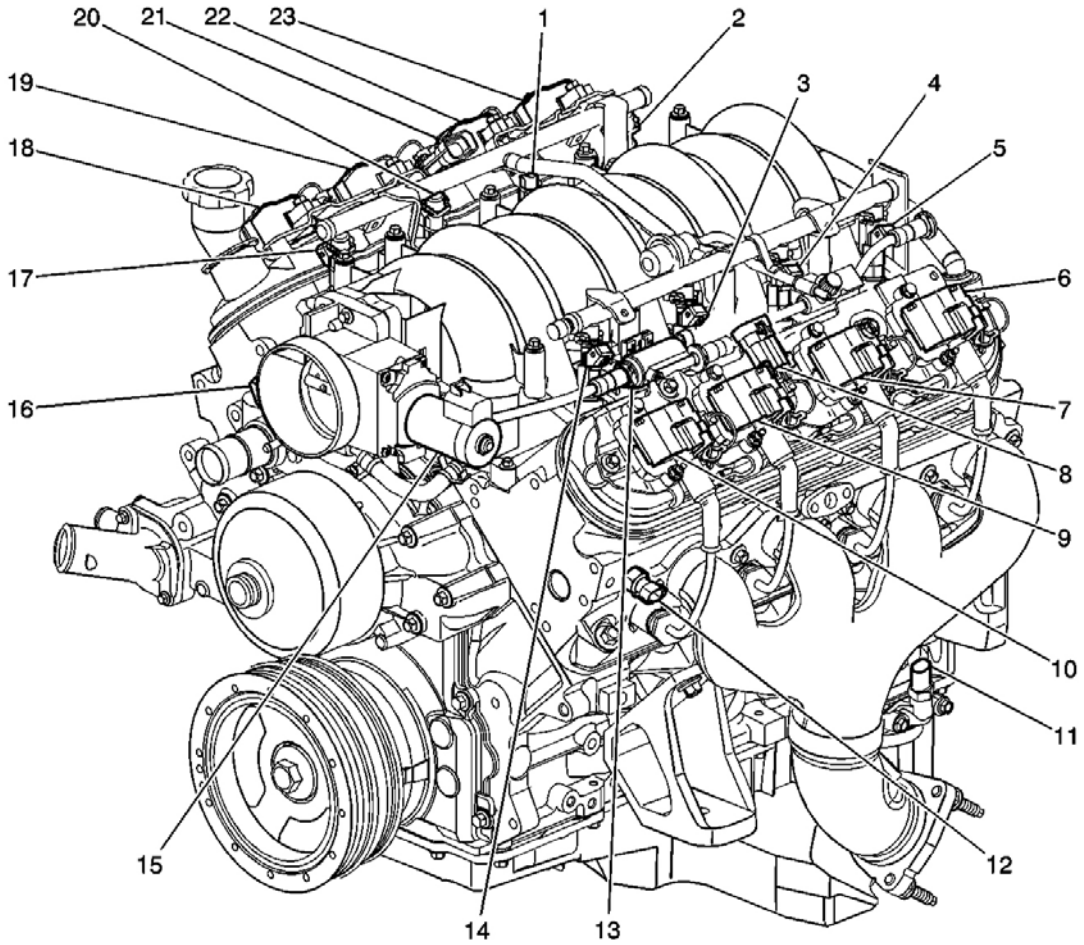

Fig. 86: Engine Component View

Courtesy of GENERAL MOTORS CORP.

Callouts For Fig. 86

Callout	Component Name
1	Fuel Injector 6
2	Fuel Injector 8
3	Fuel Injector 3
4	Fuel Injector 5
5	Fuel Injector 7
6	Ignition Coil/Module 7
7	Ignition Coil/Module 5
8	C109
9	Ignition Coil/Module 3
10	Ignition Coil/Module 1
11	Engine Oil Temperature (EOT) Sensor
12	Engine Coolant Temperature (ECT) Sensor
13	Evaporative Emission (EVAP) Canister Purge Solenoid
14	Fuel Injector 1
15	Throttle Actuator Control (TAC) Motor
16	Throttle Position (TP) Sensor
17	Fuel Injector 2
18	Ignition Coil/Module 2
19	Ignition Coil/Module 4
20	Fuel Injector 4
21	C110
22	Ignition Coil/Module 6
23	Ignition Coil/Module 8

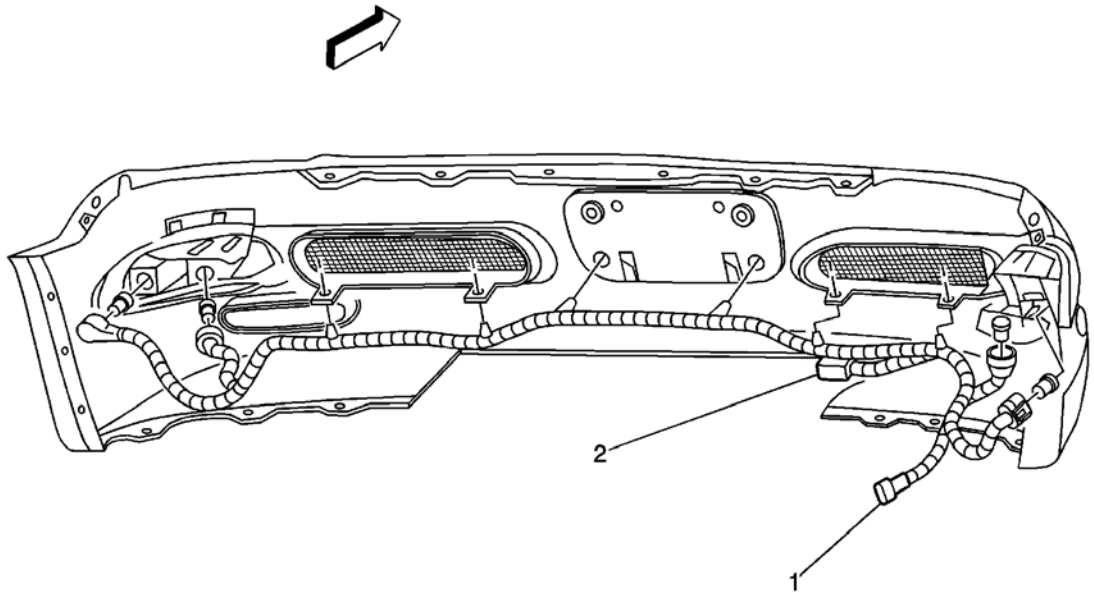

Fig. 87: Forward Lamp Jumper Harness Component View
Courtesy of GENERAL MOTORS CORP.

Callouts For Fig. 87

Callout	Component Name
1	C100
2	Sp102

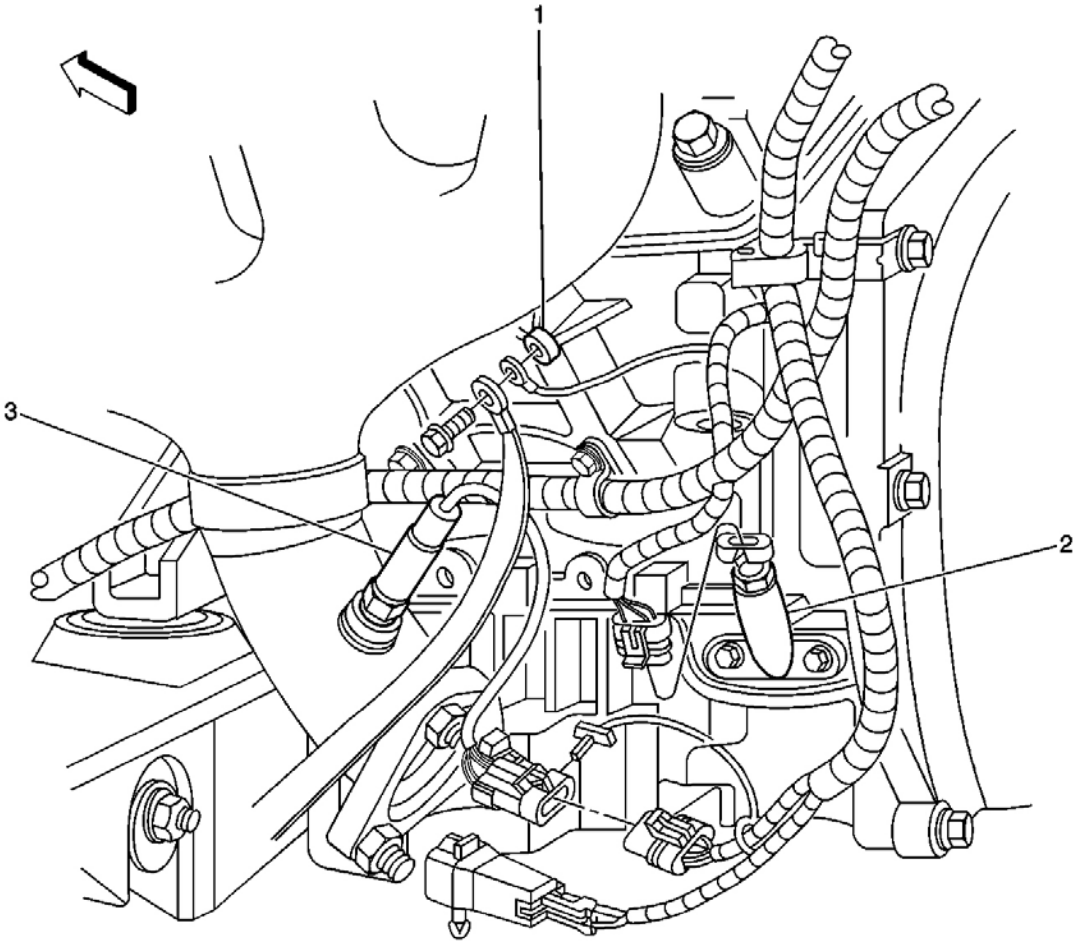

Fig. 88: Lower Side Of Engine Component View - Left
Courtesy of GENERAL MOTORS CORP.

Callouts For Fig. 88

Callout	Component Name
1	G105
2	Engine Oil Temperature (EOT) Sensor
3	Heated Oxygen Sensor (HO2S) Bank 1 Sensor 1

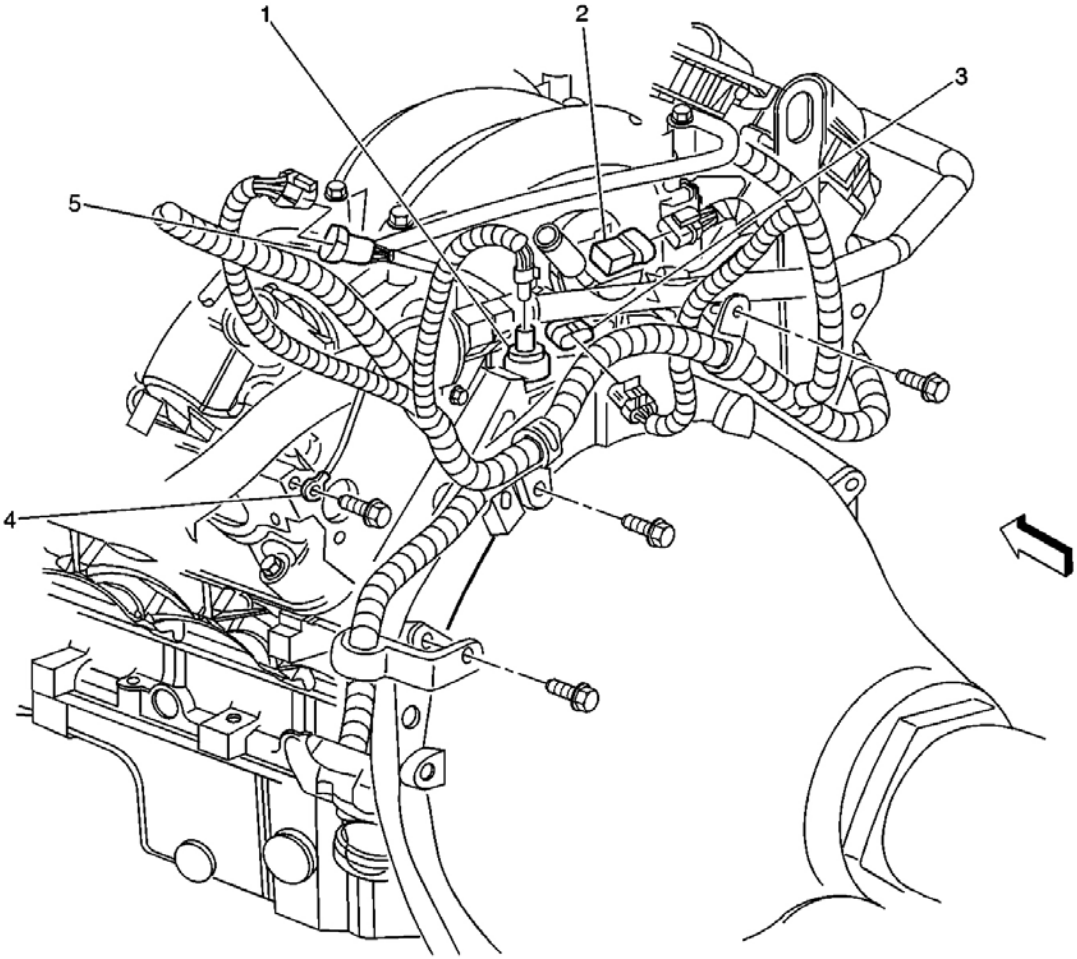

Fig. 89: Rear Of Engine Component View
Courtesy of GENERAL MOTORS CORP.

Callouts For Fig. 89

Callout	Component Name
1	Engine Oil Pressure (EOP) Sensor
2	Manifold Absolute Pressure (MAP) Sensor
3	Camshaft Position (CMP) Sensor
4	G107
5	C112

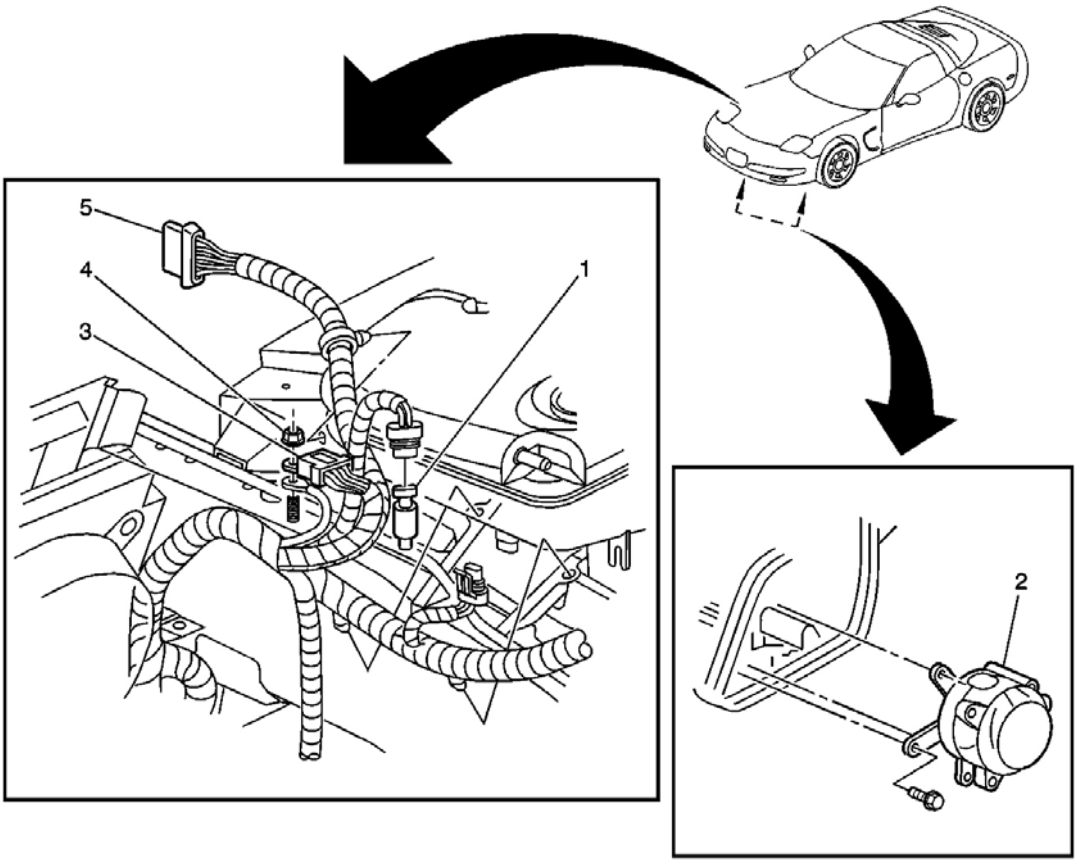

Fig. 90: Front Of Engine Compartment Component View
Courtesy of GENERAL MOTORS CORP.

Callouts For Fig. 90

Callout	Component Name
1	A/C Refrigerant Pressure Sensor
2	Secondary Air Injection (AIR) Pump
3	SP100
4	G102
5	Headlamp Door Assembly-Right Connector

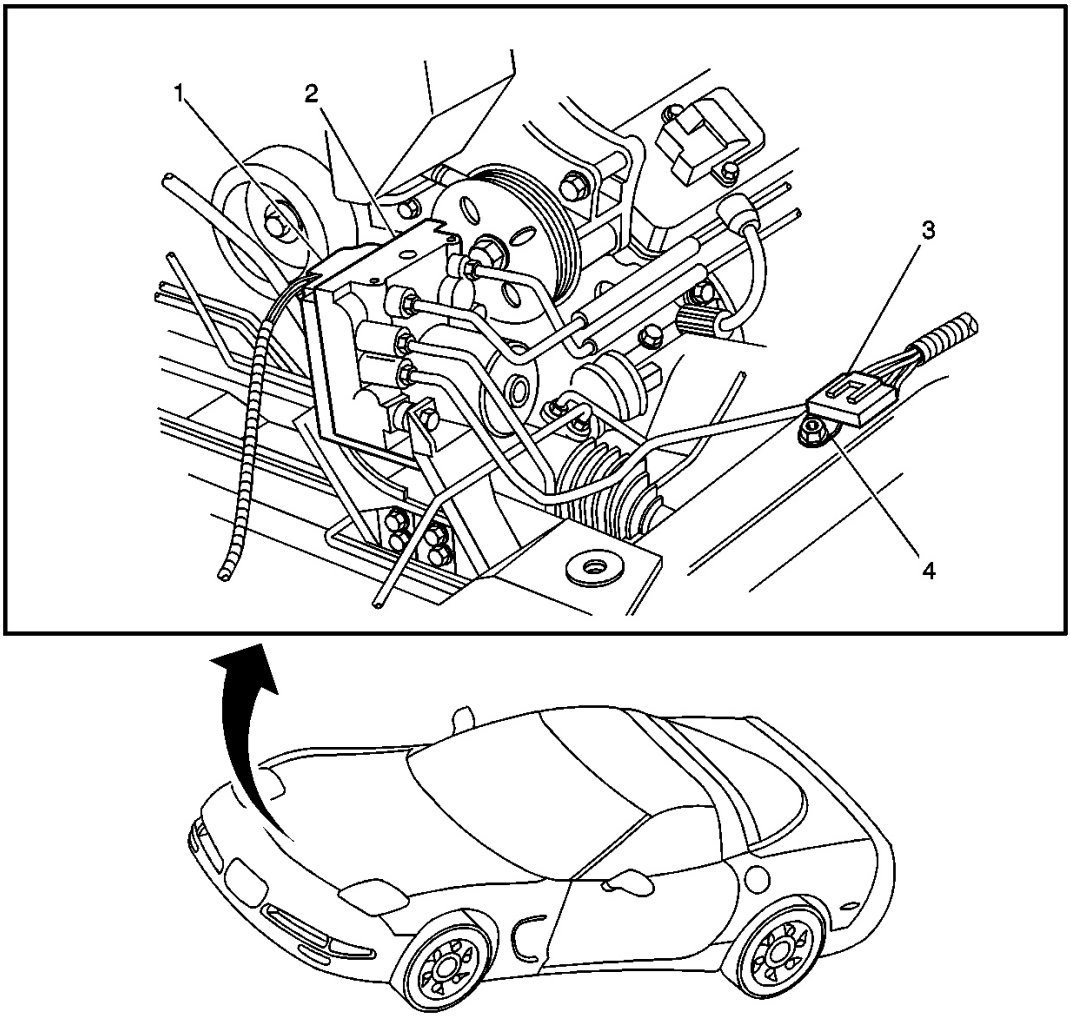

Fig. 91: Left Front Of Engine Compartment Component View
Courtesy of GENERAL MOTORS CORP.

Callouts For Fig. 91

Callout	Component Name
1	Electronic Brake Control Module (EBCM)
2	Brake Pressure Modulator Valve (BPMV)
3	SP101
4	G101

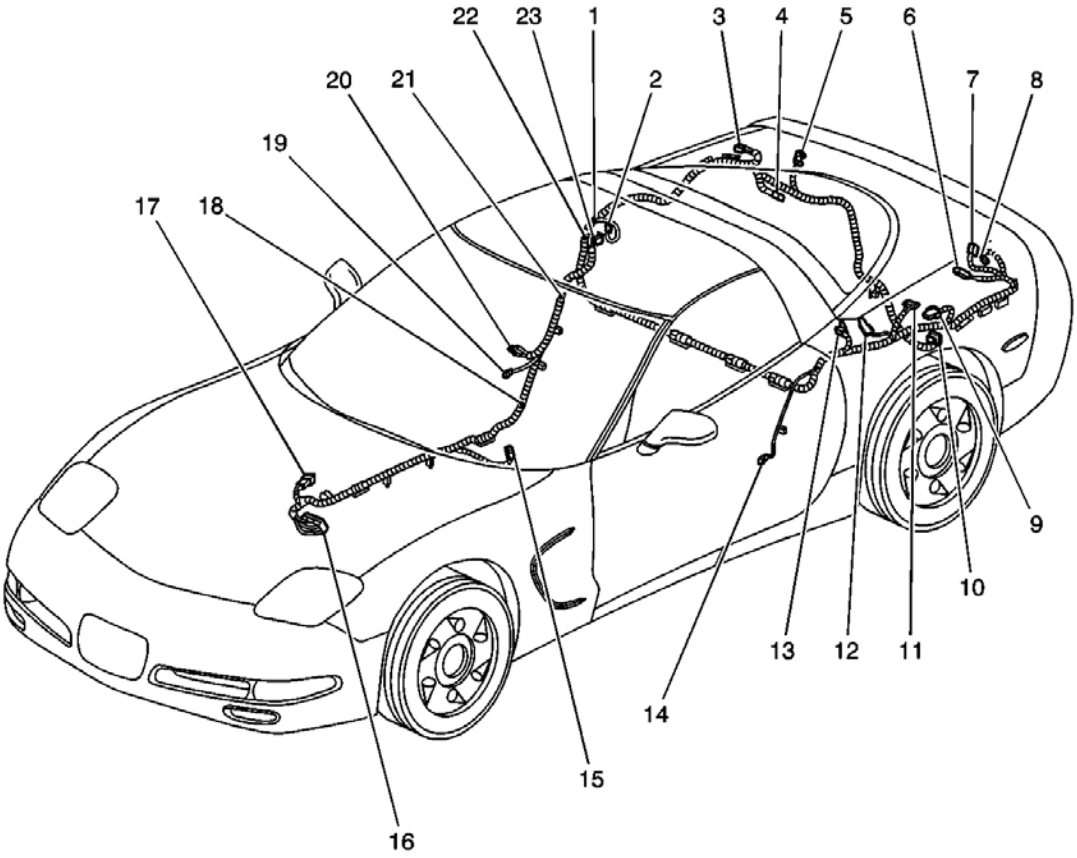

Fig. 92: Front Body Harness Component View
Courtesy of GENERAL MOTORS CORP.

Callouts For Fig. 92

Callout	Component Name
1	S304
2	Inline to Defogger Grid (Power)
3	Rear Compartment Courtesy Lamp - Right
4	Rear Compartment Lid Latch - Right C2
5	Remote Playback Device - CD Changer
6	Rear Compartment Courtesy Lamp - Left
7	Rear Compartment Lid Latch-Left C2
8	Rear Compartment Lid Latch-Left C1
9	Fuel Door Lock Actuator
10	Rear Compartment Lid Latch - Right C1
11	Remote Control Door Lock Receiver (RCDLR)
12	Inline to Defogger Grid (Ground)
13	Speaker - LR

14	G301
15	C302
16	Fuse Block - I/P C3
17	C204
18	S314 and S312
19	G302
20	SP302
21	S302
22	S303
23	Speaker - RR

ELECTRICAL CENTER IDENTIFICATION VIEWS

Fuse Block - I/P Label

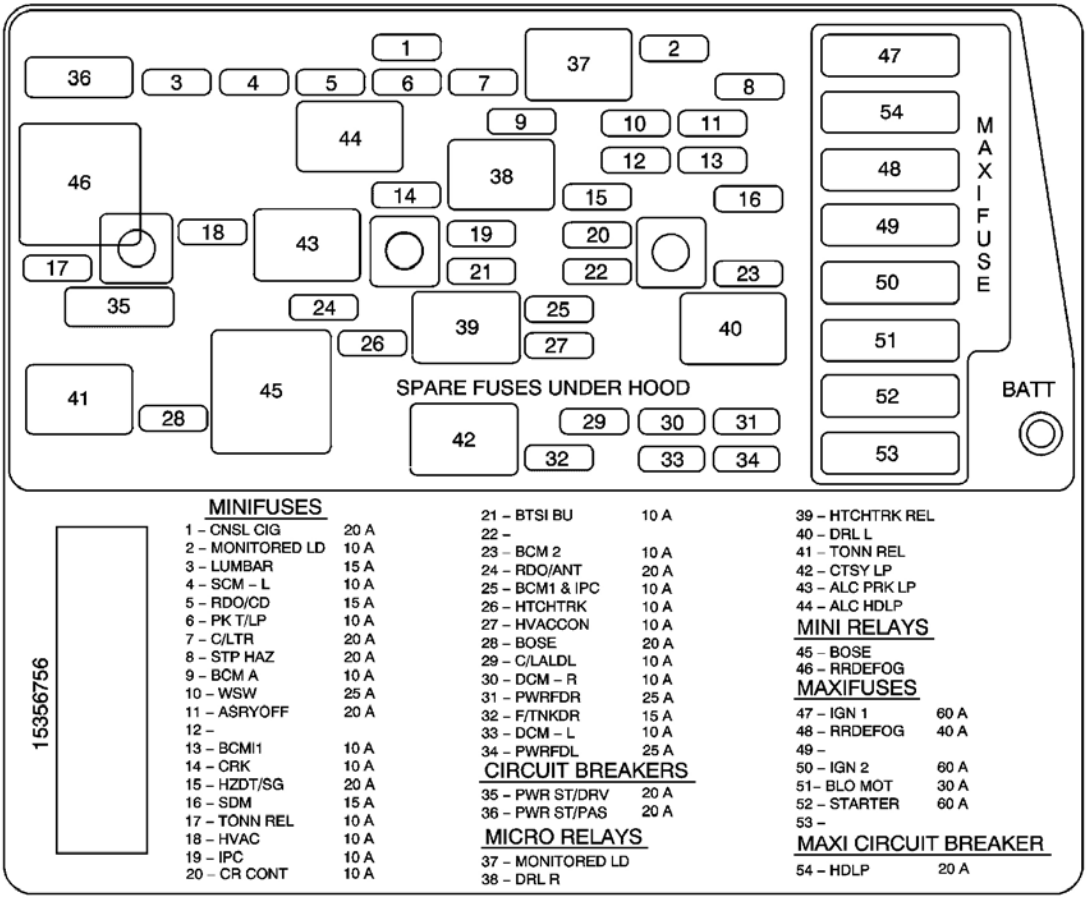

Fig. 93: Electrical Center Identification Component View
Courtesy of GENERAL MOTORS CORP.

Fuse Block - I/P Table

No.	Fuse/Circuit Breaker/Relay	Rating	Description
1	CNSL CIG Fuse	20A	Auxiliary Power Outlet
2	MONITORED LD Fuse	10A	Underhood Lamp, Body Control Module (BCM), I/P Compartment Lamp, Vanity Mirror Lamp - Left, Inside Rearview Mirror, Vanity Mirror Lamp - Right
3	LUMBAR Fuse	15A	Seat Pump - Passenger, Seat Adjuster Switch - Passenger, Seat Relay Center - Passenger
4	SCM-L Fuse	10A	Seat Adjuster Switch - Driver, Seat Control Module (SCM) - Driver (w/AQ9), Seat Relay Center-Driver (w/AR9)
5	RDO/CD Fuse	15A	Radio, Remote Playback Device - CD Changer
6	PK T/LP Fuse	10A	ALC PRK LP Relay, A/T Shift Lock Control Solenoid, Multifunction Turn Signal Lever
7	C/LTR Fuse	20A	Cigar Lighter
8	STP HZD Fuse	20A	Stop Lamp Switch, Hazard Switch
9	BCM A Fuse	10A	Body Control Module (BCM)
10	WSW Fuse	25A	Windshield Wiper/Washer Switch, Windshield Wiper Motor
11	ASRYOFF Fuse	20A	Accessory Power (Blunt Cut)
12	-	-	Not Used
13	BCM I1 Fuse	10A	Body Control Module (BCM)
14	CRK Fuse	10A	Clutch Pedal Start Switch, Park/Neutral Position (PNP) Switch
15	HZDT/SG Fuse	20A	Hazard Switch
16	SDM Fuse	15A	Inflatable Restraint Sensing and Diagnostic Module (SDM)
17	TONN REL Fuse	10A	TONN REL Relay
18	HVAC Fuse	10A	HVAC Control Module, Air Temperature Actuator - Right, Vacuum Control Assembly, RR DEFOG Relay, Air Temperature Actuator - Left (C60), Blower Motor Relay
19	IPC Fuse	10A	Instrument Panel Cluster (IPC)
20	CR CONT Fuse	10A	Multifunction Turn Signal Lever
21	BTSI BU Fuse	10A	Park/Neutral Position (PNP) Switch, Backup Lamp Switch, Inside Rearview Mirror
22	-	-	Not Used
23	BCM 2 Fuse	10A	Body Control Module (BCM), Steering Column Lock Relay
24	RDO/ANT Fuse	20A	Bose Signal Processor, Radio Power Antenna
25	BCMI and IPC Fuse	10A	Body Control Module (BCM), Instrument Panel Cluster (IPC)
26	HTCHTRK Fuse	10A	Rear Compartment Lid Latch/Latches
27	HVACCON Fuse	10A	HVAC Control Module, Remote Control Door Lock Receiver (RCDLR)
28	BOSE Fuse	20A	BOSE Relay
29	C/LADL Fuse	10A	Data Link Connector (DLC), CTSY LP Relay
30	DCM-R Fuse	10A	Passenger Door Module (PDM)

31	PWRFDR Fuse	25A	Passenger Door Module (PDM)
32	F/TNKDR Fuse	15A	Rear Compartment Lid/Fuel Door Lock Release Switch (Export), Fuel Door Lock Release Switch (Domestic), Traction/Suspension Control Switch, Fog Lamp/Rear Compartment Lid Release Switch (Domestic) Fog Lamp Switch (Export)
33	DCM-L Fuse	10A	Driver Door Module (DDM)
34	PWRFDL Fuse	25A	Driver Door Module (DDM)
35	PWR ST/DRV Circuit Breaker	20A	Seat Control Module (SCM) - Driver (w/AQ9), Seat Relay Center - Driver (w/AR9)
36	PWR ST/PAS Circuit Breaker	20A	Seat Relay Center - Passenger
37	MONITORED LD Relay	-	Underhood Lamp, Body Control Module (BCM), I/P Compartment Lamp, Vanity Mirror Lamp - Left, Inside Rearview Mirror, Vanity Mirror Lamp - Right
38	DRL R Relay	-	Park/Turn Signal Lamp - RF, Turn Signal Lamp - RF, Repeater Lamp - Right
39	HTCHTRK REL Relay	-	Rear Compartment Lid Latch/Latches
40	DRL L Relay	-	Park/Turn Signal Lamp - LF, Turn Signal Lamp - LF, Repeater Lamp - Left Park/Turn Signal Lamp - RF, Turn Signal Lamp - RF, Repeater Lamp - Right
41	TONN REL Relay	-	Folding Top Lid Latch, Folding Top Release Switch, Body Control Module (BCM)
42	CTSY LP Relay	-	Courtesy Lamps
43	ALC PRK LP Relay	-	A/T Shift Lock Control Solenoid, Multifunction Turn Signal Lever
44	ALC HDLP Relay	-	Multifunction Turn Signal Lever
45	BOSE Relay	-	Speaker - LF Door, Speaker - RF Door
46	RRDEFOG Relay	-	Rear Defogger
47	IGN 1 Fuse	60A	Ignition Switch
48	RRDEFOG Fuse	40A	RR DEFOG Relay
49	-	-	Not Used
50	IGN 2 Fuse	60A	Ignition Switch
51	BLO MOT Fuse	30A	Blower Motor Relay, Blower Motor Control Processor
52	STARTER Fuse	60A	Theft Deterrent Relay
53	-	-	Not Used
54	HDLP Circuit Breaker	20A	Multifunction Turn Signal Lever, ALC HDLP Relay

Fuse Block - I/P Top View

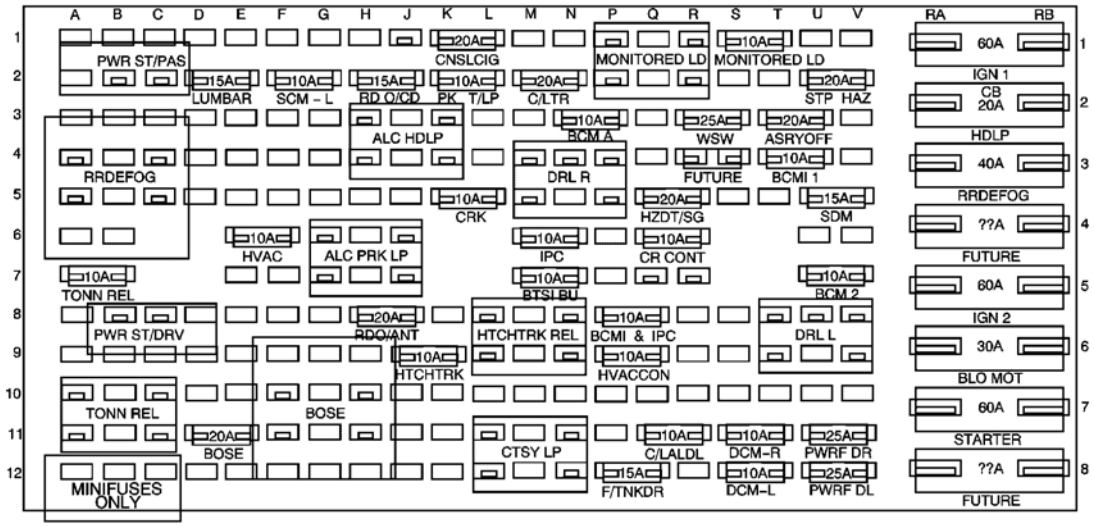

Fig. 94: Fuse Block Component View - I/P Top View
Courtesy of GENERAL MOTORS CORP.

Fuse Block - I/P Bottom View

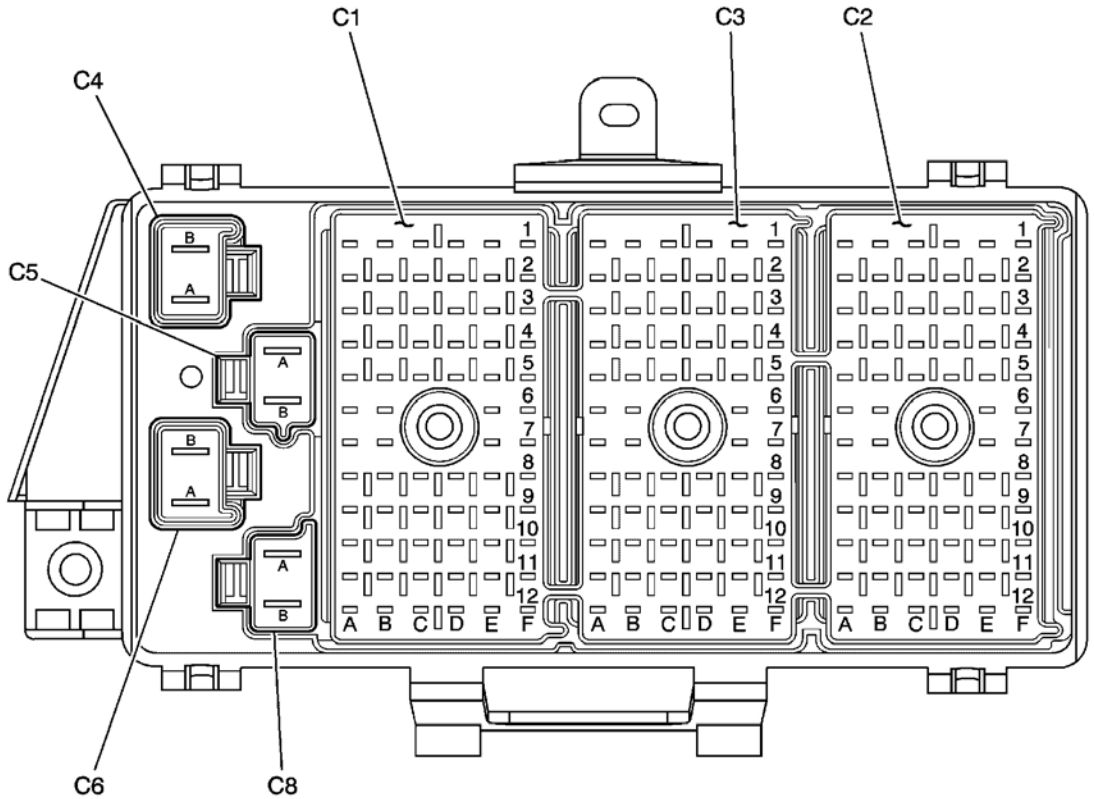

Fig. 95: Fuse Block Component - I/P Bottom View
Courtesy of GENERAL MOTORS CORP.

Fuse Block-I/P C1

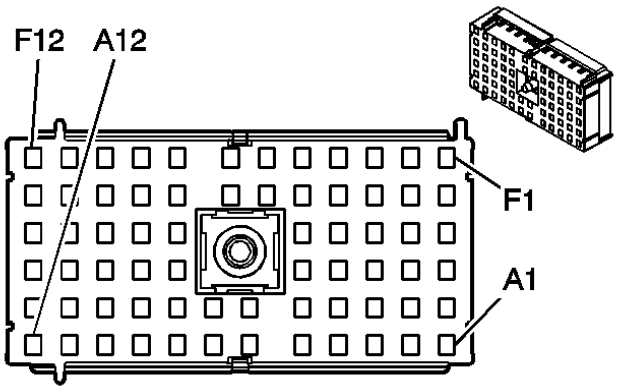

Connector Part Information		• 12177206 • 68-Way F Metri-Pack 280 Series (BLU)	
Pin	**Wire Color**	**Circuit No.**	**Function**
A1	ORN	640	Battery Positive Voltage
	ORN	640	Battery Positive Voltage
A2-A4	-	-	Not Used
A5	YEL	1139	Ignition 1 Voltage
	YEL	1139	Ignition 1 Voltage
A6-A8	-	-	Not Used
A9	ORN	2740	Battery Positive Voltage
A10-A12	-	-	Not Used
B1	ORN	640	Battery Positive Voltage
B2	ORN	140	Battery Positive Voltage
	ORN	140	Battery Positive Voltage
B3	YEL	443	Accessory Voltage
B4-B6	-	-	Not Used
B7	ORN	2540	Battery Positive Voltage
	ORN	2540	Battery Positive Voltage
B8	LT BLU	14	Left Turn Signal Lamps Supply Voltage
	LT BLU	14	Left Turn Signal Lamps Supply Voltage
B9	-	-	Not Used
B10	LT BLU	14	Left Turn Signal Lamps Supply Voltage
	LT BLU	14	Left Turn Signal Lamps Supply Voltage
B11	ORN	2240	Battery Positive Voltage

B12	ORN	2640	Battery Positive Voltage
C1	ORN	640	Battery Positive Voltage
C2-C3	-	-	Not Used
C4	PNK	1039	Ignition 1 Voltage
C5	-	-	Not Used
C8	ORN/BLK	1976	Left Front Turn Signal Relay Control
C9	LT BLU/WHT	1314	Left Front Turn Signal Lamp Supply Voltage
C10	-	-	Not Used
C11	ORN	2340	Battery Positive Voltage
C12	ORN	2140	Battery Positive Voltage
D1-D2	-	-	Not Used
D3	YEL	143	Accessory Voltage
D4	-	-	Not Used
D5	PNK	3	Ignition Switch Voltage-Hot in On and Start
D8-D12	-	-	Not Used
E1	-	-	Not Used
E2	DK BLU	1393	Courtesy Lamp Relay Control
E3-E4	-	-	Not Used
E5	PNK	3	Ignition Switch Voltage-Hot in On and Start
E6	PNK	1239	Ignition 1 Voltage
E7-E8	-	-	Not Used
E9	GRY	2169	Convertible Top Relay Cover Release Control
E10-E11	-	-	Not Used
E12	ORN	2840	Battery Positive Voltage
F1	RED/BLK	744	Trunk Ajar Switch Signal
F2	-	-	Not Used
F3	BRN	4	Accessory Voltage
F4	-	-	Not Used
F5	PNK	1739	Ignition 1 Voltage
F6	-	-	Not Used
F7	ORN	300	Ignition 3 Voltage
F8	ORN	1640	Battery Positive Voltage
	ORN	1640	Battery Positive Voltage
F9	ORN	540	Battery Positive Voltage
F10	PNK	79	Fuel Door Release Solenoid Supply Voltage
F11	-	-	Not Used
F12	ORN	2840	Battery Positive Voltage

Fuse Block Terminal Identification - I/P C2

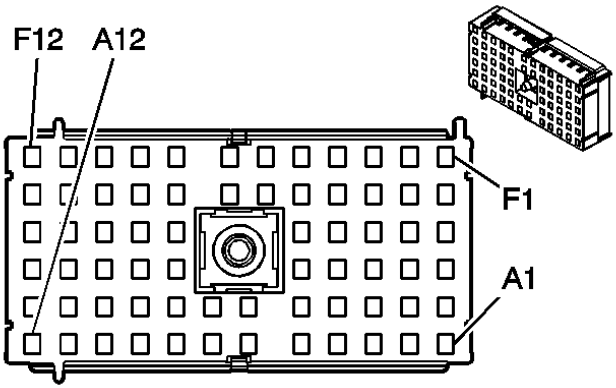

Connector Part Information		• 12177207 • 68-Way F Metri-Pack 280 Series (GRY)	
Pin	**Wire Color**	**Circuit No.**	**Function**
A1-A2	-	-	Not Used
A3	YEL	243	Accessory Voltage
A4	DK BLU	15	Right Turn Signal Lamps Supply Voltage
	DK BLU	15	Right Turn Signal Lamps Supply Voltage
A5	WHT	193	Rear Defog Relay Control
A6	-	-	Not Used
A7	ORN	300	Ignition 3 Voltage
A8-A9	-	-	Not Used
A10	BRN	199	Left Rear Speaker Output (+)
A11	ORN	1240	Battery Positive Voltage
A12	-	-	Not Used
B1	ORN	1140	Battery Positive Voltage
B2	ORN	840	Battery Positive Voltage
	ORN	840	Battery Positive Voltage
B3	DK BLU	15	Right Turn Signal Lamps Supply Voltage
	DK BLU	15	Right Turn Signal Lamps Supply Voltage
B4	LT GRN	1966	Right Front Turn Signal Relay Control
B5	DK BLU /WHT	1315	Right Front Turn Signal Lamp Supply Voltage
B6	PNK	139	Ignition 1 Voltage
B7	BRN	341	Ignition 3 Voltage
	BRN	341	Ignition 3 Voltage
B8	-	-	Not Used
B9	ORN	1840	Battery Positive Voltage

B10	YEL	116	Left Rear Speaker Output (-)
B11	DK GRN	835	Entertainment and Comfort Serial Data
	DK GRN	835	Entertainment and Comfort Serial Data
B12	ORN	740	Battery Positive Voltage
	ORN	740	Battery Positive Voltage
C1-C3	-	-	Not Used
C4	DK BLU	2167	Convertible Top Cover Ajar Switch Supply Voltage
	DK BLU	2167	Convertible Top Cover Ajar Switch Supply Voltage
C5	PPL	1606	Crank Voltage
C8	LT BLU	1344	Trunk Release Relay Control
C9	-	-	Not Used
C10	PNK	1045	RFA Class 2 Serial Data
C11	GRY/BLK	690	Courtesy Lamp Low Control
C12	ORN	740	Battery Positive Voltage
D1	ORN	1540	Battery Positive Voltage
D2	ORN	240	Battery Positive Voltage
	ORN	240	Battery Positive Voltage
D3	WHT	103	Headlamp Switch Headlamps On Signal
	WHT	103	Headlamp Switch Headlamps On Signal
D4	RED	842	Battery Positive Voltage
D5	YEL	5	Crank Voltage
D8-D9	-	-	Not Used
D10	BLK	150	Ground
D11	LT GRN	2166	Convertible Top Cover Release Switch Supply Voltage
D12	-	-	Not Used
E1	ORN	440	Battery Positive Voltage
E2	-	-	Not Used
E3	ORN	1740	Battery Positive Voltage
E4	RED	842	Battery Positive Voltage
E5	YEL/BLK	1784	Twilight Sentinel Enable Signal
E6	BRN	9	Park Lamp Supply Voltage
	BRN	9	Park Lamp Supply Voltage
E7	-	-	Not Used
E8	ORN	40	Battery Positive Voltage
E9	-	-	Not Used
E10	ORN	360	Amplifier Feed
E11	LT BLU	115	Right Rear Speaker Output (-)
E12	-	-	Not Used
F1	DK BLU	46	Right Rear Speaker Output (+)
F2	-	-	Not Used
F3	WHT	352	Headlamp Relay Coil Supply Voltage

F4	RED	842	Battery Positive Voltage
F5	BLK/WHT	351	Ground
F6	BRN	41	Ignition 3 Voltage
	BRN	41	Ignition 3 Voltage
F7	BRN	41	Ignition 3 Voltage
	BRN	41	Ignition 3 Voltage
F8-F9	-	-	Not Used
F10	ORN	360	Amplifier Feed
F11	DK GRN	145	Antenna Relay Coil Supply Voltage
F12	BLK/WHT	851	Ground

Fuse Block Terminal Identification - I/P C3

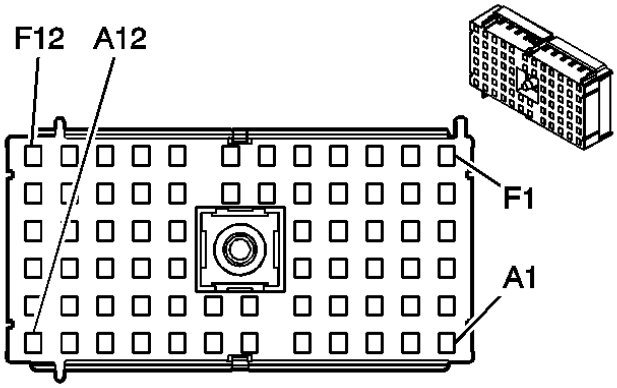

Connector Part Information		• **12177205** • **68-Way F Metri-Pack 280 Series (GRN)**	
Pin	**Wire Color**	**Circuit No.**	**Function**
A1	DK BLU	46	Right Rear Speaker Output (+)
A2-A4	-	-	Not Used
A5	BLK/WHT	351	Ground
A6-A7	-	-	Not Used
A8	ORN	40	Battery Positive Voltage
A9	LT BLU	383	Trunk Release Control
A10-A11	-	-	Not Used
A12	BLK/WHT	851	Ground
B1	-	-	Not Used
B2	ORN/BLK	1140	Battery Positive Voltage
B3	-	-	Not Used
B4	RED/BLK	744	Trunk Ajar Switch Signal

B5-B6	-	-	Not Used
B7	ORN	540	Battery Positive Voltage
B8	-	-	Not Used
B9	BRN	199	Left Rear Speaker Output (+)
B10	YEL	116	Left Rear Speaker Output (-)
B11	-	-	Not Used
B12	ORN	740	Battery Positive Voltage
C1-C4	-	-	Not Used
C5	DK BLU	2167	Convertible Top Cover Ajar Switch Supply Voltage
C8	-	-	Not Used
C9	PNK	79	Fuel Door Release Solenoid Control
C10	DK GRN	835	Entertainment and Comfort Serial Data
C11	-	-	Not Used
C12	RED /DK GRN	2166	Convertible Top Cover Release Switch Supply Voltage
D1	-	-	Not Used
D2	ORN	1440	Battery Positive Voltage
D3-D11	-	-	Not Used
D12	PNK	1045	RFA Class 2 Serial Data
E1-E2	-	-	Not Used
E3	ORN	440	Ignition 1 Voltage
E4	-	-	Not Used
E5	BLK	293	Rear Defog Element Supply Voltage
E6-E10	-	-	Not Used
E11	LT BLU	115	Right Rear Speaker Output (-)
E12	DK GRN	145	Antenna Relay Coil Supply Voltage
F1-F10	-	-	Not Used
F11	PPL	2168	Folding Top Actuator Supply Voltage
F12	-	-	Not Used

Fuse Block Terminal Identification - I/P C4

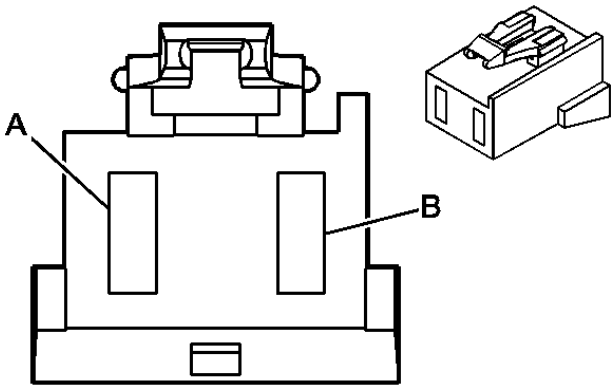

Connector Part Information		• 12146038 • 2-Way F MaxiFuse (LT GRY)	
Pin	**Wire Color**	**Circuit No.**	**Function**
A	RED	842	Battery Positive Voltage
B	RED	1442	Battery Positive Voltage

Fuse Block Terminal Identification - I/P C5

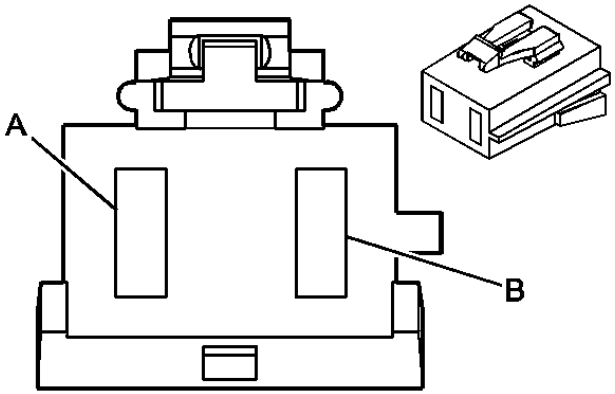

Connector Part Information		• 12146037 • 2-Way F MaxiFuse (BLK)	
Pin	**Wire Color**	**Circuit No.**	**Function**
A	-	-	Not Used
B	-	-	Not Used

Fuse Block Terminal Identification - I/P C6

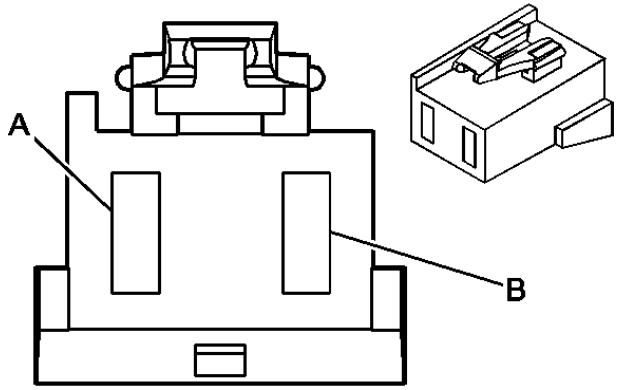

Connector Part Information		• 12160605 • 2-Way F MaxiFuse (LT GRN)	
Pin	**Wire Color**	**Circuit No.**	**Function**
A	RED	1342	Battery Positive Voltage
	RED	1342	Battery Positive Voltage
B	RED	1542	Battery Positive Voltage

Fuse Block Terminal Identification - I/P C8

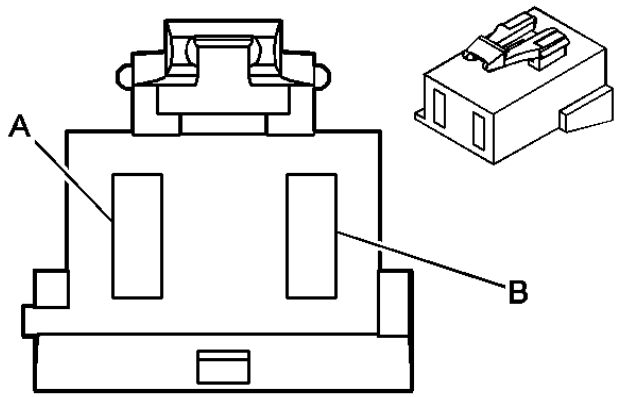

Connector Part Information		• 12160606 • 2-Way F MaxiFuse (BRN)	
Pin	**Wire Color**	**Circuit No.**	**Function**
A	RED	542	Battery Positive Voltage
B	-	-	Not Used

Fuse Block - Underhood Label

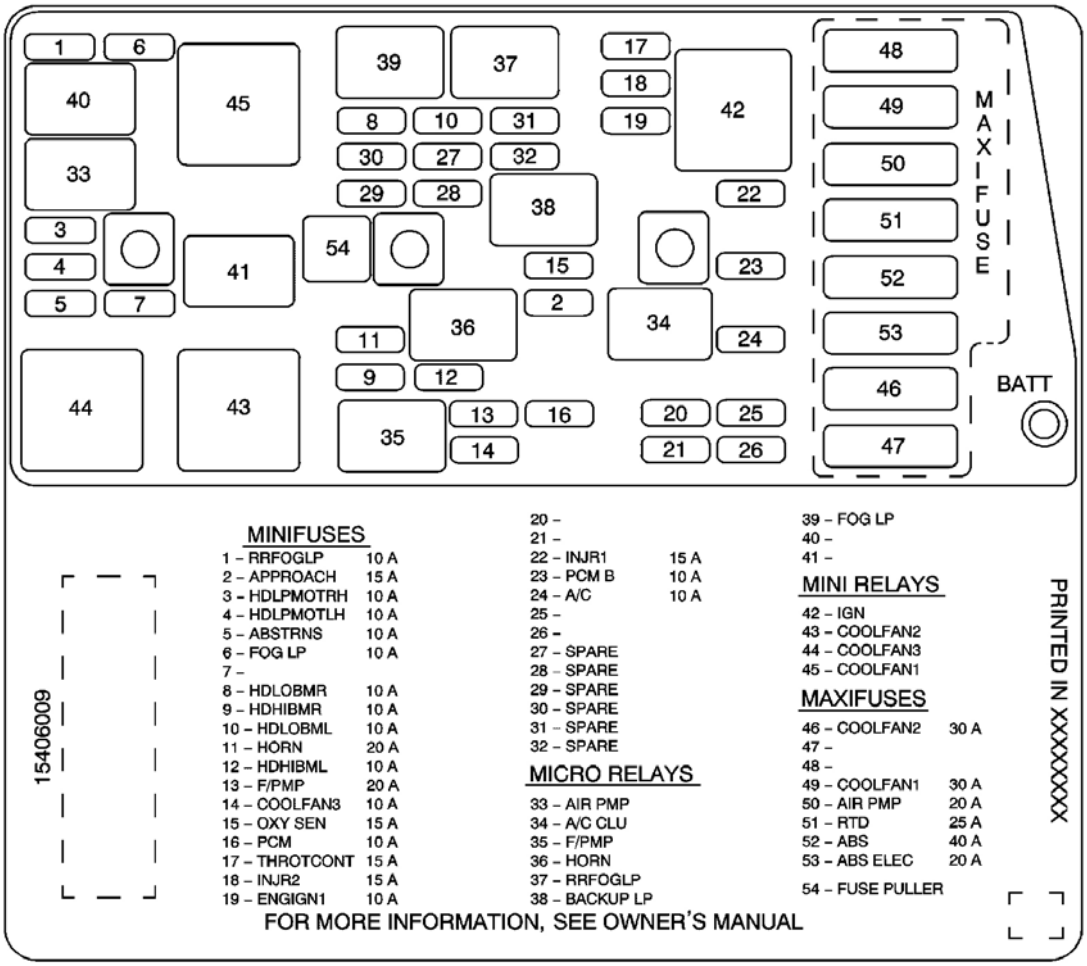

Fig. 96: Fuse Block Component View - Underhood Label
Courtesy of GENERAL MOTORS CORP.

Fuse Block - Underhood Table

No.	Fuse/Relay	Rating	Description
1	RRFOGLP (Export) Fuse	10A	Fog Lamp Switch, Fog Lamp LR, Fog Lamp RR
2	APPROACH Fuse	15A	BACKUP LP Relay, DRL L Relay, DRL R Relay
3	HDLPMOTRH Fuse	10A	Headlamp Door Control Module
4	HDLPMOTLH Fuse	10A	Headlamp Door Control Module
5	ABSTRNS Fuse	10A	Electronic Brake Control Module (EBCM), Electronic Suspension

			Control (ESC) Module
6	FOG LP Fuse	10A	Fog Lamp/Rear Compartment Lid Release Switch (Domestic), Fog Lamp Switch (Export), Fog Lamp - RF, Fog Lamp - LF
7	-	-	Not Used
8	HDLOBMR Fuse	10A	Headlamp Low Beam - Right
9	HDHIBMR Fuse	10A	Headlamp High Beam - Right
10	HDLOBML Fuse	10A	Headlamp Low Beam - Left
11	HORN Fuse	20A	Horn Assembly
12	HDHIBML Fuse	10A	Headlamp High Beam - Left
13	F/PMP Fuse	20A	Fuel Pump Relay
14	COOLFAN3 Fuse	10A	COOL FAN 2 Relay, COOL FAN 3 Relay
15	OXY SEN Fuse	15A	Heated Oxygen Sensors (HO2S) Bank 1 Sensor 1, Bank 1 Sensor 2, Bank 2 Sensor 1, Bank 2 Sensor 2
16	PCM Fuse	10A	Powertrain Control Module (PCM), IGN Relay
17	THROTCONT Fuse	15A	Throttle Actuator Control (TAC) Module
18	INJR2 Fuse	15A	Fuel Injectors 2,4,6,8, Ignition Coil/Modules 2,4,6,8
19	ENGIGN1 Fuse	10A	Cruise Control Release Switch, Stop Lamp Switch, Mass Air Flow (MAF) Sensor, Evaporative Emission (EVAP) Canister Purge Solenoid, Evaporative Emission (EVAP) Canister Vent Solenoid, Automatic Transmission, Secondary Air Injection (AIR) Solenoid, Reverse Inhibit Solenoid (MM6), Skip Shift Solenoid (MM6), AIR PMP Relay
20-21	-	-	Not Used
22	INJR1 Fuse	15A	Fuel Injectors 1,3,5,7, Ignition Coil/Modules 1,3,5,7
23	PCM B Fuse	10A	Powertrain Control Module (PCM)
24	A/C Fuse	10A	A/C CLU Relay
25-26	-	-	Not Used
27	SPARE	-	Spare Fuse
28	SPARE	-	Spare Fuse
29	SPARE Fuse	-	Spare Fuse
30	SPARE Fuse	-	Spare Fuse
31	SPARE Fuse	-	Spare Fuse
32	SPARE Fuse	-	Spare Fuse
33	AIR PMP Relay	-	Secondary AIR Injection (AIR) Pump, Powertrain Control Module (PCM)
34	A/C CLU Relay	-	A/C Compressor Clutch, A/C Compressor Clutch Diode, Powertrain Control Module (PCM)
35	F/PMP Relay	-	Fuel Pump and Sender Assembly

36	HORN Relay	-	Horn Fuse, Horn Assembly
37	RRFOGLP Relay	-	RR FOG LP Fuse, Body Control Module (BCM)
38	BACKUP LP Relay	-	Backup Lamp - Left, Backup Lamp - Right, Body Control Module (BCM)
39	FOG LP (Export) Relay	-	FOG LP Fuse, Body Control Module (BCM)
40-41	-	-	Not Used
42	IGN Relay	-	A/C Fuse, THROTCONT Fuse, INJR 1 Fuse, INJR 2 Fuse, ENGIG 1 Fuse
43	COOLFAN2 Relay	-	Power Control Module (PCM), Cooling Fan - Right
44	COOLFAN3 Relay	-	Power Control Module (PCM), Cooling Fan - Right, Cooling Fan - Left
45	COOLFAN1 Relay	-	Power Control Module (PCM), Cooling Fan - Right, Cooling Fan - Left
46	COOLFAN2 Fuse	30A	COOL FAN 2 Relay
47-48	-	-	Not Used
49	COOLFAN1 Fuse	30A	COOL FAN 1 Relay
50	AIR PMP Fuse	20A	AIR PMP Relay
51	RTD Fuse	25A	Electronic Suspension Control (ESC) Module
52	ABS Fuse	40A	Electronic Brake Control Module (EBCM)
53	ABS ELEC Fuse	20A	Not Used
54	FUSE PULLER	-	Fuse Puller

Fuse Block - Underhood Top View

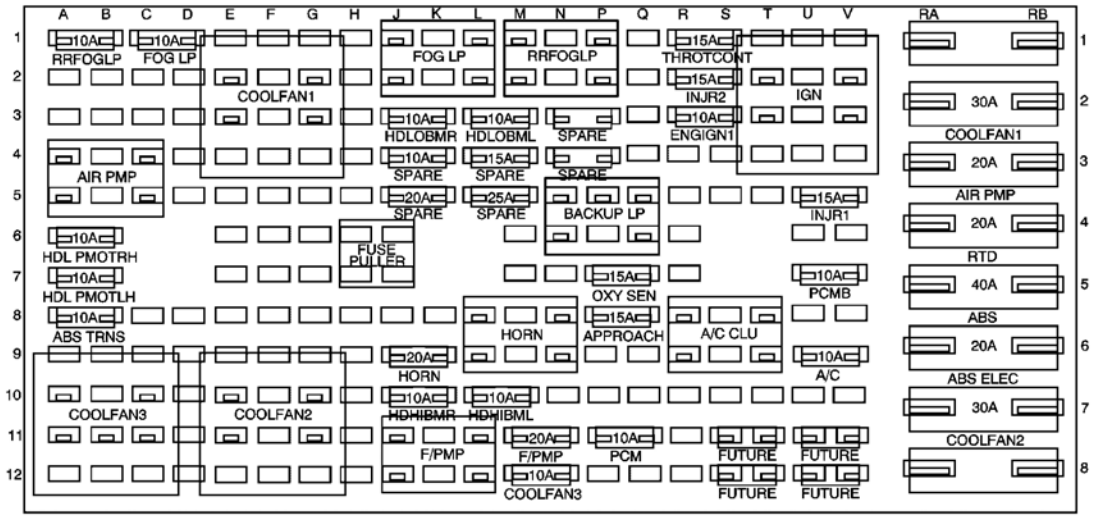

Fig. 97: Fuse Block Component View - Underhood Top View
Courtesy of GENERAL MOTORS CORP.

Fuse Block - Underhood Bottom View

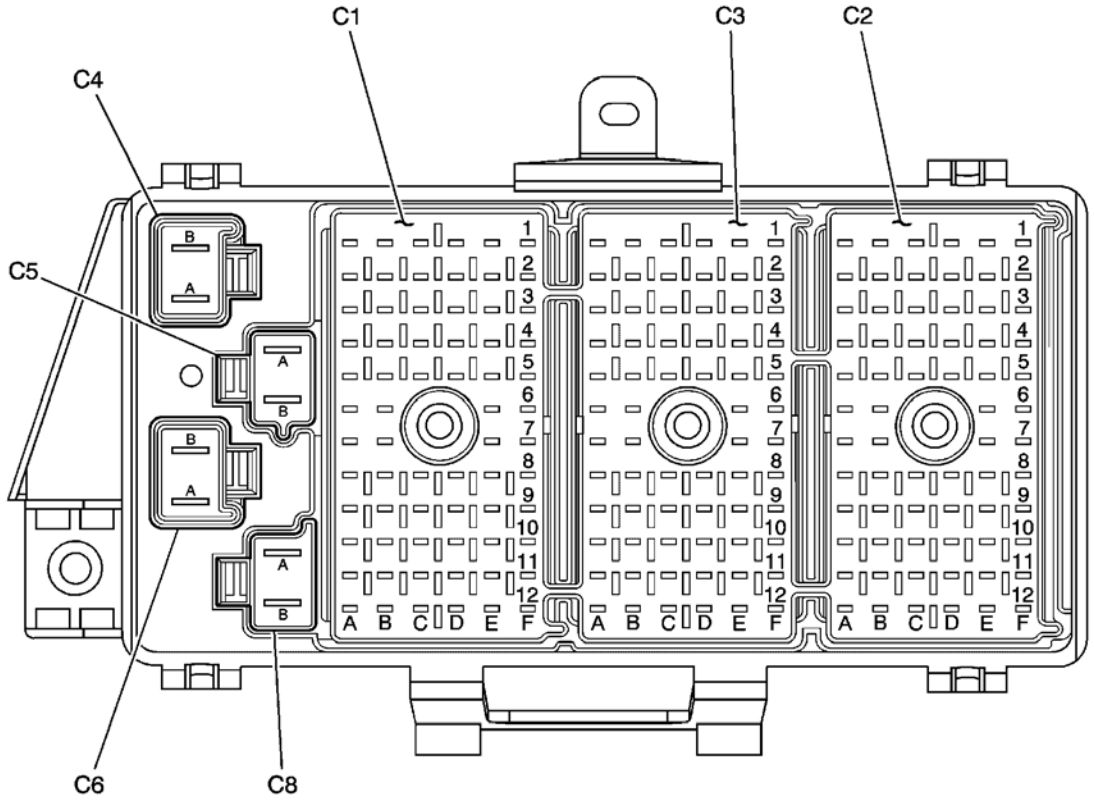

Fig. 98: Fuse Block Component View - Underhood Bottom View
Courtesy of GENERAL MOTORS CORP.

Fuse Block Terminal Identification - Underhood C1

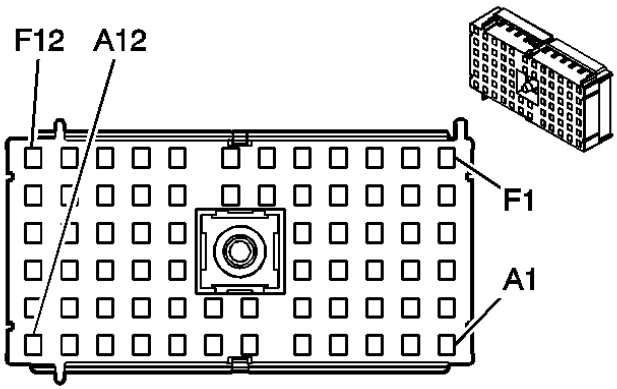

Connector Part Information		• 15303513 • 68-Way F Metri-Pack 280 Series (BLK)	
Pin	**Wire Color**	**Circuit No.**	**Function**
A1	PNK	839	Ignition 1 Voltage
A2	-	-	Not Used
A3	BLK/WHT	451	Ground
A4-A5	-	-	Not Used
A6	PNK	639	Ignition 1 Voltage
A7-A12	-	-	Not Used
B1	PNK	839	Ignition 1 Voltage
B2	PNK	339	Ignition 1 Voltage
B3	-	-	Not Used
B4	BRN/WHT	419	MIL Control
B5	PNK	639	Ignition 1 Voltage
B6	ORN	340	Battery Positive Voltage
B7	ORN	340	Battery Positive Voltage
B8	BRN	241	Ignition 3 Voltage
B9-B12	-	-	Not Used
C1	PNK	839	Ignition 1 Voltage
C2-C3	-	-	Not Used
C4	GRY/BLK	87	Cruise Control Resume/Accel Switch Signal
C5	PNK	639	Ignition 1 Voltage
C8	DK GRN	59	A/C Compressor Clutch Supply Voltage
	DK GRN		

C9	/WHT	459	A/C Clutch Relay Control
C10	WHT	375	Skip Shift Indicator Control
C11-C12	-	-	Not Used
D1	PNK	539	Ignition 1 Voltage
D2-D3	-	-	Not Used
D4	WHT	121	Engine Speed Signal
D5	PNK	639	Ignition 1 Voltage
D8	PPL	420	TCC Brake Switch Signal
D9	-	-	Not Used
D10	PPL	421	AIR Solenoid Control
D11-E1	-	-	Not Used
E2	PNK	839	Ignition 1 Voltage
E3	PNK	339	Ignition 1 Voltage
E4	GRY	397	Cruise Control On Switch Signal
E5	PNK	639	Ignition 1 Voltage
E6	BRN	241	Ignition 3 Voltage
E7	BRN	241	Ignition 3 Voltage
E8-E9	-	-	Not Used
E10	DK BLU	473	High Speed Cooling Fan Relay Control
E11	-	-	Not Used
E12	DK GRN/WHT	465	Fuel Pump Relay Control
F1	DK GRN	335	Low Speed Cooling Fan Relay Control
F2	PNK	839	Ignition 1 Voltage
F3	LT BLU	20	Stop Lamp Supply Voltage
F4	DK BLU	84	Cruise Control Set/Coast Switch Signal
F5-F6	-	-	Not Used
F7	BRN	241	Ignition 3 Voltage
F8	-	-	Not Used
F9	BRN	436	AIR Pump Relay Control
F10	PPL	6	Starter Solenoid Crank Voltage
F11	PNK	239	Driver 36 Volt Reference
F12	BLK	150	Ground

Fuse Block Terminal Identification - Underhood C2

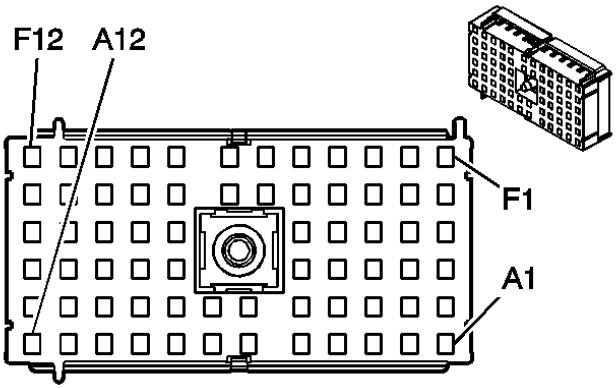

Connector Part Information		• 15328719 • 68-Way F Metri-Pack 280 Series (GRY)	
Pin	**Wire Color**	**Circuit No.**	**Function**
A1-A2	-	-	Not Used
A3	WHT	121	Engine Speed Signal
A4	DK BLU	84	Cruise Control Set/Coast Switch Signal
A5	DK BLU	38	Backup Lamp Relay Control
A6	LT GRN	24	Backup Lamp Supply Voltage
A7	ORN	300	Ignition 3 Voltage
A8-A9	-	-	Not Used
A10	PPL	6	Starter Solenoid Crank Voltage
A11	PNK	3	Ignition Switch Voltage-Hot in On and Start
A12	-	-	Not Used
B1	GRY	1901	Left Front Modulator Hold Control
B2-B3	-	-	Not Used
B4	GRY/BLK	87	Cruise Control Resume/Accel Switch Signal
B5	-	-	Not Used
B6	PPL	420	TCC Brake Switch Signal
B7	PNK	339	Ignition 1 Voltage
B8	-	-	Not Used
B9	ORN	2740	Battery Positive Voltage
B10-B12	-	-	Not Used
C1-C3	-	-	Not Used
C4	GRY	397	Cruise Control On Switch Signal
C5	BRN/WHT	419	MIL Control
C8	BLK	28	Horn Relay Control
	BLK	28	Horn Relay Control

C9-C12	-	-	Not Used
D1	PPL	34	Front Fog Lamps Supply Voltage
D2	-	-	Not Used
D3	TAN	12	Headlamp Low Beam Supply Voltage
D4	PPL	333	Brake Fluid Level Sensor Signal
D5	-	-	Not Used
D8	YEL	143	Accessory Voltage
D9	-	-	Not Used
D10	LT GRN	11	Headlamp High Beam Supply Voltage
D11	BRN	9	Park Lamp Supply Voltage
D12	-	-	Not Used
E1	DK GRN /WHT	1317	Fog Lamp Relay Control
E2-E3	-	-	Not Used
E4	RED	122	Rear Fog Lamp Supply Voltage
E5	LT BLU/WHT	1314	Left Front Turn Signal Lamp Supply Voltage
E6	DK GRN	306	Headlamp Switch Headlamps Off Signal
	DK GRN	306	Headlamp Switch Headlamps Off Signal
E7	BLK/WHT	99	Windshield Washer Fluid Level Signal
E8	YEL	143	Accessory Voltage
E9-E12	-	-	Not Used
F1	LT BLU	20	Stop Lamp Supply Voltage
F2	-	-	Not Used
F3	ORN	640	Battery Positive Voltage
F4	WHT	103	Headlamp Switch Headlamps On Signal
	WHT	103	Headlamp Switch Headlamps On Signal
F5	DK BLU/WHT	1315	Right Front Turn Signal Lamp Supply Voltage
F6	PNK	94	Windshield Washer Switch Signal
F7-F9	-	-	Not Used
F10	WHT	375	Skip Shift Indicator Control
F11	BRN	9	Park Lamp Supply Voltage
F12	-	-	Not Used

Fuse Block Terminal Identification - Underhood C3

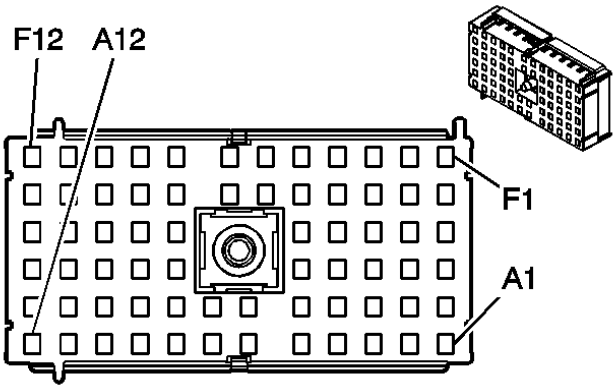

Connector Part Information		• 15303512 • 68-Way F Metri-Pack 280 Series (LT GRY)	
Pin	**Wire Color**	**Circuit No.**	**Function**
A1	LT BLU	20	Stop Lamp Supply Voltage
	LT BLU	20	Stop Lamp Supply Voltage
A2	-	-	Not Used
A3	ORN	640	Battery Positive Voltage
A4	WHT	103	Headlamp Switch Headlamps On Signal
A5	DK BLU/WHT	1315	Right Front Turn Signal Lamp Supply Voltage
	DK BLU/WHT	1315	Right Front Turn Signal Lamp Supply Voltage
A6	PNK	94	Windshield Washer Switch Signal
A7-A8	-	-	Not Used
A9	DK GRN	29	Horn Control
A10	LT GRN/BLK	311	Right Headlamp High Beam Supply Voltage
A11	-	-	Not Used
A12	GRY	120	Fuel Pump Supply Voltage
B1-B2	-	-	Not Used
B3	LT BLU	409	Cooling Fan Motor Supply Voltage
B4	-	-	Not Used
B5	LT BLU/WHT	1314	Left Front Turn Signal Lamp Supply Voltage
	LT BLU/WHT	1314	Left Front Turn Signal Lamp Supply Voltage
B6	DK GRN	306	Headlamp Switch Headlamps Off Signal
B7-B8	-	-	Not Used
B9	DK GRN	59	A/C Compressor Clutch Supply Voltage
B10-B11	-	-	Not Used
B12	BRN	9	Park Lamp Supply Voltage
C1	PPL	34	Front Fog Lamps Supply Voltage

C2	-	-	Not Used
C3	YEL	712	Left Headlamp Low Beam Supply Voltage
C4	TAN/WHT	312	Right Headlamp Low Beam Supply Voltage
C5-C8	-	-	Not Used
C9	BLK/WHT	99	Windshield Washer Fluid Level Signal
C10	DK GRN/WHT	711	Left Headlamp High Beam Supply Voltage
C11	-	-	Not Used
C12	BRN	9	Park Lamp Supply Voltage
D1-D2	-	-	Not Used
D3	PPL	421	AIR Solenoid Control
D4-D9	-	-	Not Used
D10	GRY	532	Cooling Fan Motor Supply Voltage
D11	-	-	Not Used
D12	BRN	9	Park Lamp Supply Voltage
E1-E2	-	-	Not Used
E3	PPL	333	Brake Fluid Level Sensor Signal
E4	PPL	34	Front Fog Lamps Supply Voltage
E5	-	-	Not Used
E6	ORN	3040	Battery Positive Voltage
E7	ORN	2940	Battery Positive Voltage
E8	BRN	641	Ignition 3 Voltage
	BRN	641	Ignition 3 Voltage
E9	LT GRN	24	Brake Lamp Supply Voltage
E10	WHT	504	Cooling Fan Motor Ground
E11	-	-	Not Used
E12	BRN	9	Park Lamp Supply Voltage
F1	RED	122	Rear Fog Lamp Supply Voltage
F2	PNK	339	Ignition 1 Voltage
F3	-	-	Not Used
F4	PNK	339	Ignition 1 Voltage
F5	RED	78	AIR Pump Supply Voltage
F6-F8	-	-	Not Used
F9	GRY	1524	Backup Lamp Supply Voltage
F10	-	-	Not Used
F11	BLK	250	Ground
F12	BRN	9	Park Lamp Supply Voltage

Fuse Block Terminal Identification - Underhood C4

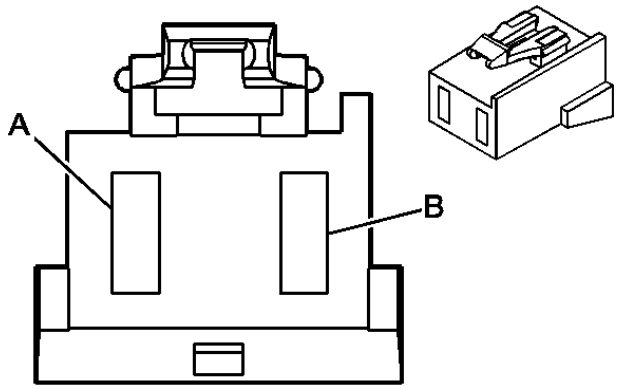

Connector Part Information		• 12146038 • 2-Way F MaxiFuse (LT GRY)	
Pin	**Wire Color**	**Circuit No.**	**Function**
A	-	-	Not Used
B	-	-	Not Used

Fuse Block Terminal Identification - Underhood C5

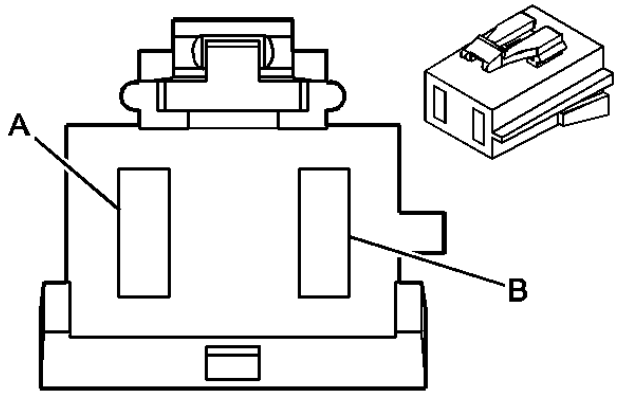

Connector Part Information		• 12146037 • 2-Way F MaxiFuse (BLK)	
Pin	**Wire Color**	**Circuit No.**	**Function**
A	-	-	Not Used
B	RED	1842	Battery Positive Voltage

Fuse Block Terminal Identification - Underhood C6

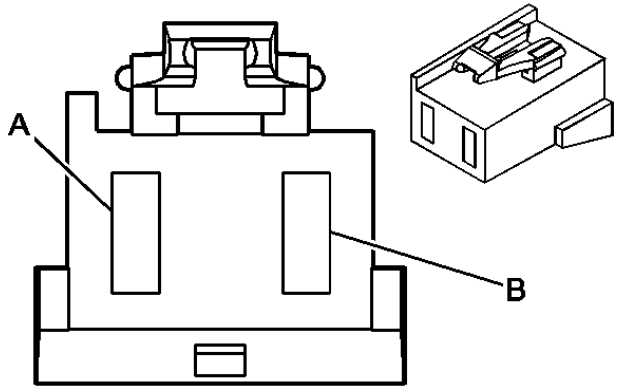

Connector Part Information		• 12160605 • 2-Way F MaxiFuse (LT GRN)	
Pin	**Wire Color**	**Circuit No.**	**Function**
A	-	-	Not Used
B	RED	1642	Battery Positive Voltage

Fuse Block Terminal Identification - Underhood C8

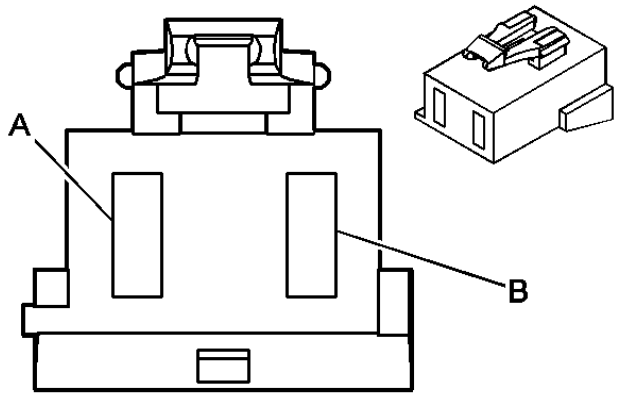

Connector Part Information		• 12160606 • 2-Way F MaxiFuse (BRN)	
Pin	**Wire Color**	**Circuit No.**	**Function**
A	-	-	Not Used
B	-	-	Not Used

POWER AND GROUNDING CONNECTOR END VIEWS

Auxiliary Power Outlet Terminal Identification

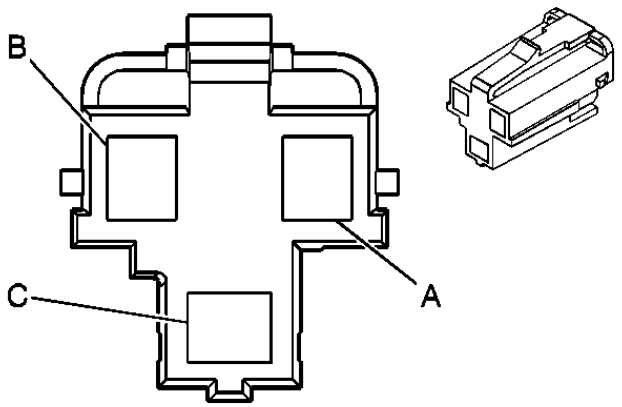

Connector Part Information		• 12176446 • 3-Way F Metri-Pack 280 Series, Flexlock (BLK)	
Pin	**Wire Color**	**Circuit No.**	**Function**
A	ORN	1540	Battery Positive Voltage
B	-	-	Not Used
C	BLK	150	Ground

Cigar Lighter Terminal Identification

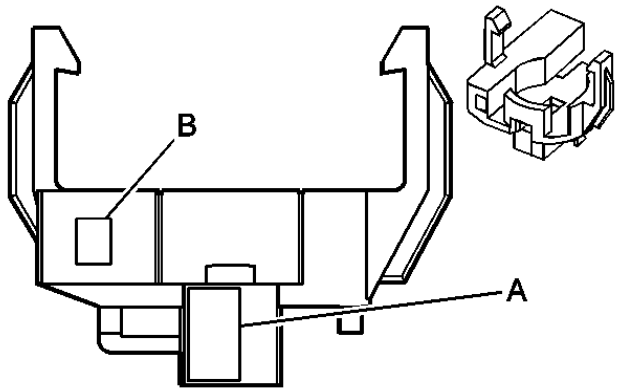

Connector Part Information		• 12047699 • 2-Way Miscellaneous Family Series (GRY)	
Pin	**Wire Color**	**Circuit No.**	**Function**
A	ORN	840	Battery Positive Voltage

B	BLK	150	Ground

Ignition Switch Terminal Identification C1

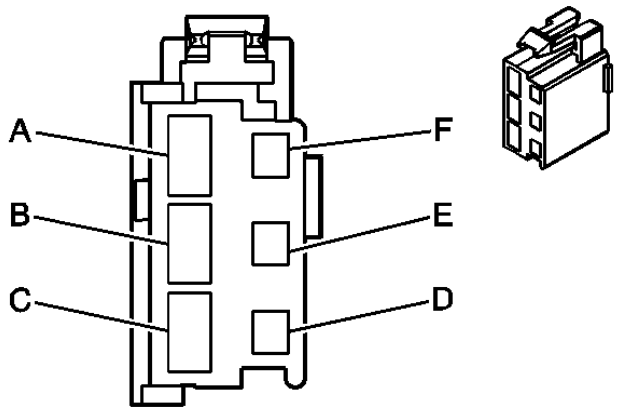

Connector Part Information		• **12110075** • **6-Way F Metri-Pack Mixed Series (NAT)**	
Pin	**Wire Color**	**Circuit No.**	**Function**
A	RED	1442	Battery Positive Voltage
B	YEL	5	Crank Voltage
C	ORN	300	Ignition 3 Voltage
D	LT GRN/BLK	80	Key In Ignition Switch Signal
E-F	-	-	Not Used

Ignition Switch Terminal Identification C2

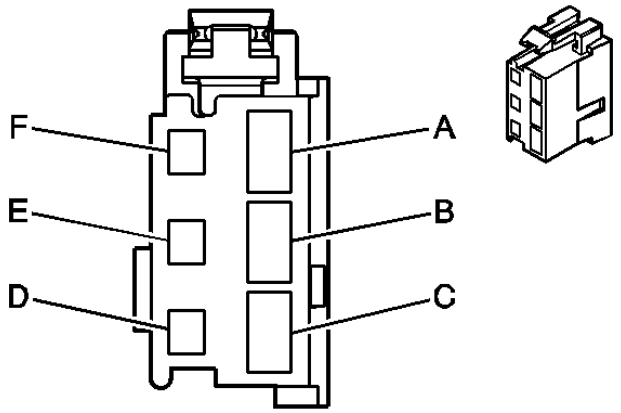

Connector Part Information		• 12162229 • 6-Way F Metri-Pack Mixed Series (BLK)	
Pin	**Wire Color**	**Circuit No.**	**Function**
A	RED	1542	Battery Positive Voltage
B	PNK	3	Ignition 1 Voltage
C	BRN	4	Accessory Voltage
D	TAN	159	Key Out Ignition Switch Signal
E	BLK	150	Ground
F	-	-	Not Used

Ignition Switch Terminal Identification C3

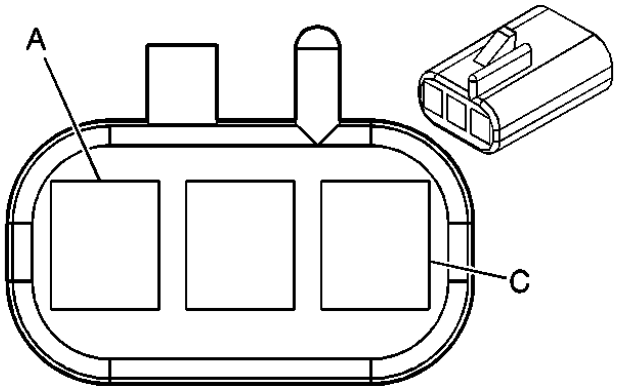

Connector Part Information		• 12047781 • 3-Way F Metri Pack 150 Series (BLK)	
Pin	**Wire Color**	**Circuit No.**	**Function**
A	PPL/WHT	1074	Ignition Key Resistor Low Reference
B	WHT/BLK	1073	Ignition Key Resistor Signal
C	-	-	Not Used

INLINE HARNESS CONNECTOR END VIEWS

C100 Forward Lamp Harness Terminal Identification To Forward Lamp Jumper Harness

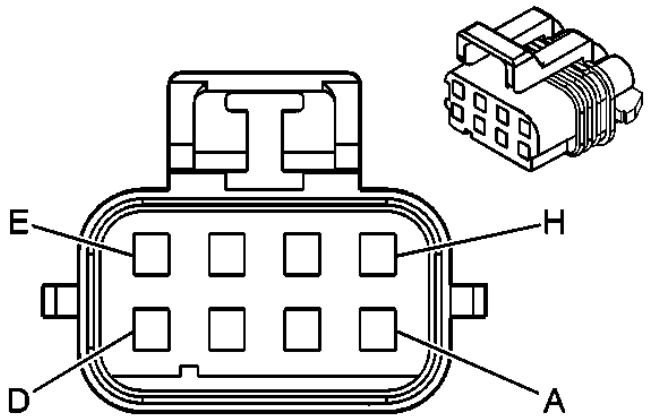

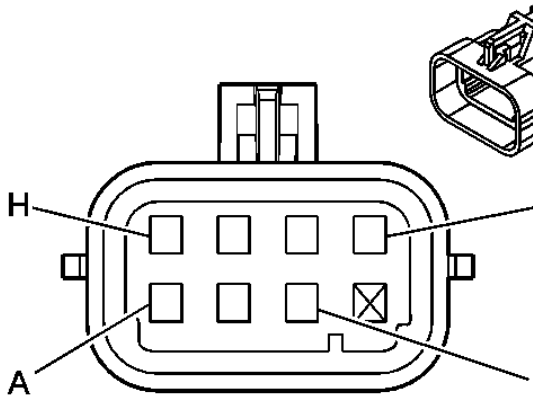

Connector Part Information		• 12047932 • 8-Way F Metri-Pack 150 Series (BLK)		Connector Part Information			
Pin	**Wire Color**	**Circuit No.**	**Function**	**Pin**	**Wire Color**	**Circuit No.**	
A	BRN	9	Park Lamp Supply Voltage	A	BRN	9	Park Lar
B	BRN	9	Park Lamp Supply Voltage	B	BRN	9	Park Lar
C	BRN	9	Park Lamp Supply Voltage	C	BRN	9	Park Lar
D	BRN	9	Park Lamp Supply Voltage	D	BRN	9	Park Lar
E	LT BLU/ WHT	1314	Left Front Turn Signal Lamp Supply Voltage	E	LT BLU/ WHT	1314	Left Fro Supply V
F	DK BLU/ WHT	1315	Right Front Turn Signal Lamp Supply Voltage	F	DK BLU/ WHT	1315	Right Fr Supply V
G	BLK	150	Ground	G	BLK	150	Ground
H	-	-	Not Used	H	-	-	Not Use

C102 Instrument Panel Harness Terminal Identification To Forward Lamp Harness

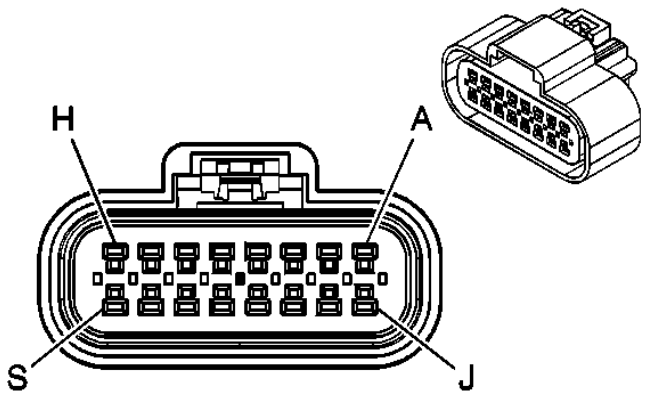

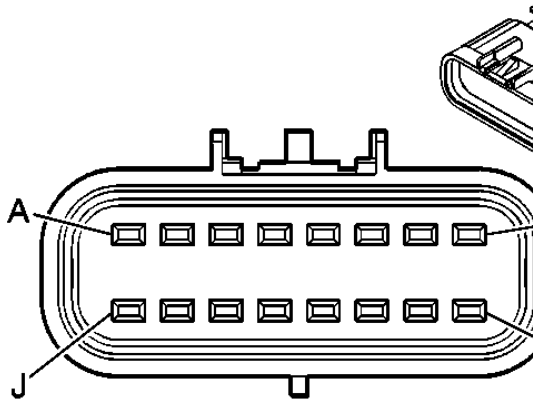

Connector Part Information		• 115326863 • 16-Way F 150 GT Series (BLK)		Connector Part Information			
Pin	**Wire Color**	**Circuit No.**	**Function**	**Pin**	**Wire Color**	**Circuit No.**	
A	LT BLU	1764	Steering Wheel Position Signal B	A	LT BLU	1764	Steering
B	DK GRN /WHT	817	Vehicle Speed Signal	B	DK GRN /WHT	817	Vehicle S
C	DK GRN	1049	PCM Class 2 Serial Data	C	DK GRN	1049	PCM Cla
D	DK GRN /WHT	762	A/C Request Signal	D	DK GRN /WHT	762	A/C Req
E	GRY	48	Cruise Control Release Switch Signal	E	GRY	48	Cruise C
F	LT GRN /BLK	735	Ambient Temperature Sensor Signal	F	LT GRN /BLK	735	Ambient
G	GRY/BLK	1798	Ground	G	GRY/BLK	1798	Ground
H	LT GRN	1763	Steering Wheel Position Signal A	H	LT GRN	1763	Steering
J	BLK	470	Low Reference	J	BLK	470	Low Ref
K	GRY	1056	Steering Wheel Position Sensor 5V Reference Voltage	K	GRY	1056	Steering Referenc
L	ORN/BLK	556	Low Reference	L	ORN/BLK	556	Low Ref
M	LT BLU	1122	ABS/TCS Class 2 Serial Data	M	LT BLU	1122	ABS/TC
N	DK BLU	716	Yaw Rate Sensor Signal	N	DK BLU	716	Yaw Rat
P	LT GRN	1338	Lateral Accelerometer	P	LT GRN	1338	Lateral A

	/BLK		Signal		/BLK		
R	GRY	847	Extended Travel Brake Switch Signal	R	GRY	847	Extendec
S	DK GRN /WHT	357	Oil Temperature Sensor Signal	S	DK GRN /WHT	357	Oil Temp

C105 Transmission Harness To Terminal Identification LF Wheel Speed Sensor

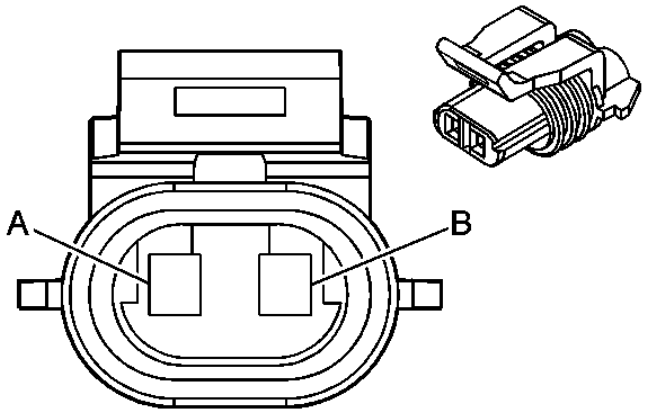

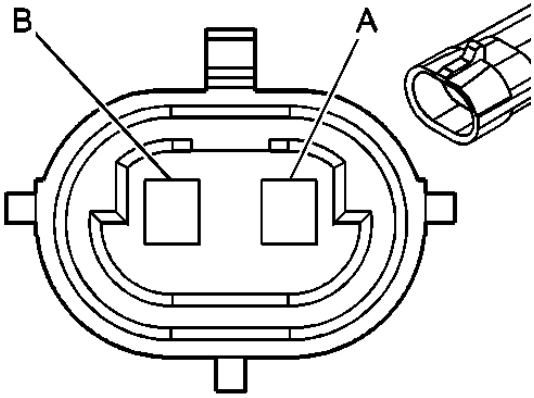

Connector Part Information		• 12052638 • 2-Way F Metri-Pack 150 Series (GRY)		Connector Part Information			
Pin	**Wire Color**	**Circuit No.**	**Function**	**Pin**	**Wire Color**	**Circuit No.**	
A	LT BLU	830	Left Front Wheel Speed Sensor Signal	A	BLK	830	Left Fro
B	YEL	873	Left Front Wheel Speed Sensor Low Reference	B	WHT	873	Left Fro Referen

C108 Transmission Harness To Terminal Identification RF Wheel Speed Sensor

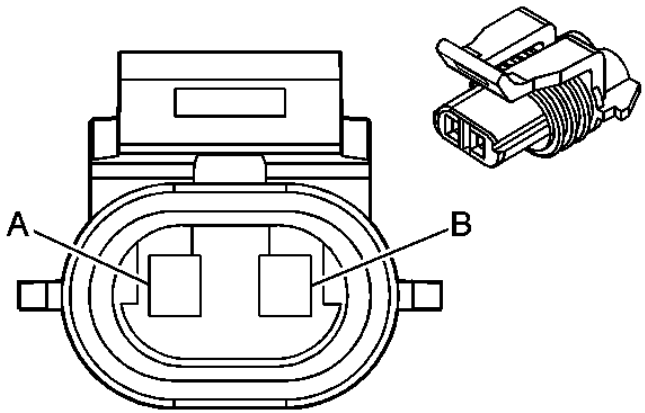

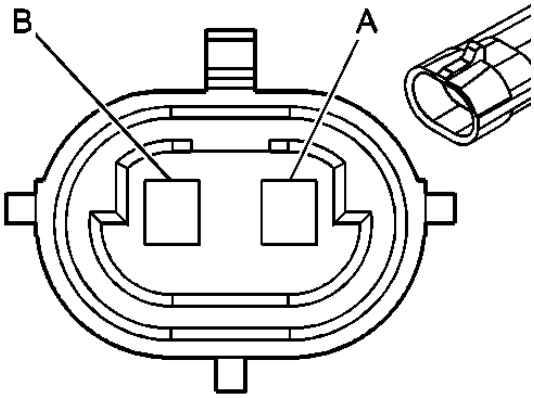

Connector Part Information		• 12052638 • 2-Way F Metri-Pack 150 Series (GRY)		Connector Part Information			
Pin	**Wire Color**	**Circuit No.**	**Function**	**Pin**	**Wire Color**	**Circuit No.**	
A	DK GRN	872	Right Front Wheel Speed Sensor Signal	A	WHT	872	Right Fr Signal
B	TAN	833	Right Front Wheel Speed Sensor Low Reference	B	BLK	833	Right Fr Referen

C109 Left Ignition Control Module Jumper Harness Terminal Identification To Engine Harness

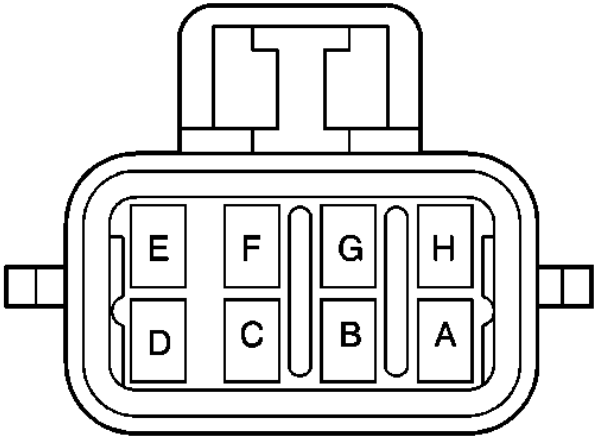

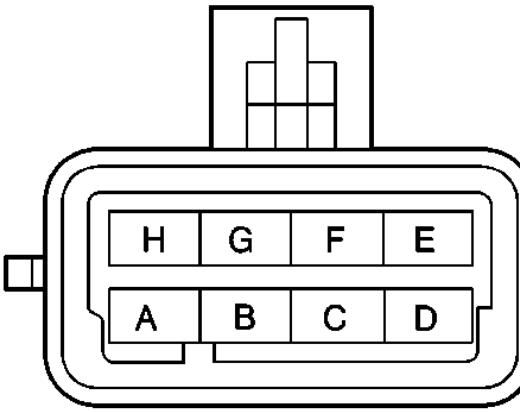

Connector Part Information		• 12047934 • 8-Way F Metri-Pack 150 Series (LT GRY)		Connector Part Information			
Pin	**Wire Color**	**Circuit No.**	**Function**	**Pin**	**Wire Color**	**Circuit No.**	
A	BLK/WHT	151	Ground	A	BLK	151	Gr
B	RED	2127	IC 7 Control	B	RED	2127	IC
C	DK GRN	2125	IC 5 Control	C	DK GRN	2125	IC
D	-	-	Not Used	D	-	-	No
E	BRN	2129	Low Reference	E	BRN	2129	Lo
F	LT BLU	2123	IC 3 Control	F	LT BLU	2123	IC
G	PPL	2121	IC 1 Control	G	PPL	2121	IC
H	PNK	639	Ignition 1 Voltage	H	PNK	39	Ign

C110 Right Ignition Control Module Jumper Harness Terminal Identification To Engine Harness

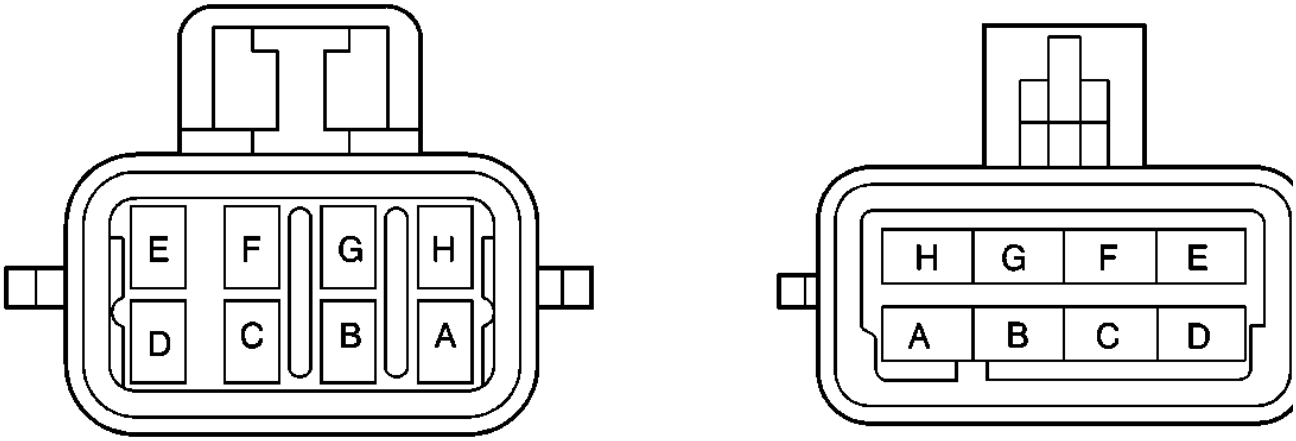

Connector Part Information		• 12047934 • 8-Way F Metri-Pack 150 Series (LT GRY)		Connector Part Information			
Pin	**Wire Color**	**Circuit No.**	**Function**	**Pin**	**Wire Color**	**Circuit No.**	
A	BLK/WHT	151	Ground	A	BLK	151	Gr
B	RED/WHT	2122	IC 2 Control	B	RED	2127	IC
C	DK GRN /WHT	2124	IC 4 Control	C	DK GRN	2125	IC

D	-	-	Not Used	D	-	-	No
E	BRN/WHT	2130	Low Reference	E	BRN	2129	Lo
F	LT BLU /WHT	2126	IC 6 Control	F	LT BLU	2123	IC
G	PPL/WHT	2128	IC 8 Control	G	PPL	2121	IC
H	PNK	839	Ignition 1 Voltage	H	PNK	39	Ign

C112 Knock Sensor Jumper Harness Terminal Identification To Engine Harness

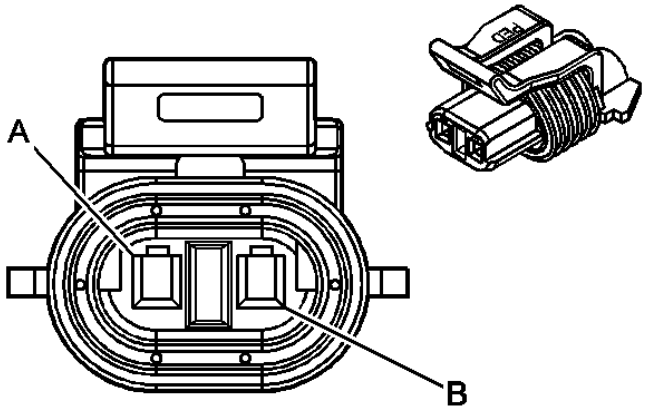

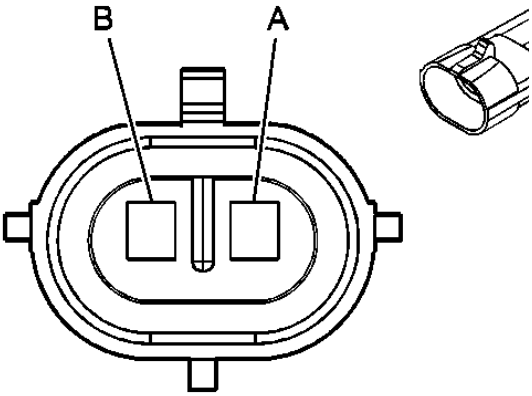

Connector Part Information		• 12052635 • 2-Way F Metri-Pack 150 Series (BLK)		Connector Part Information			
Pin	**Wire Color**	**Circuit No.**	**Function**	**Pin**	**Wire Color**	**Circuit No.**	
A	DK BLU	496	Knock Sensor 1 Signal	A	DK BLU	496	Kn
B	LT BLU	1876	Knock Sensor 2 Signal	B	LT BLU	1876	Kn

C113 Forward Lamp Harness Terminal Identification To Underhood Lamp Jumper Harness

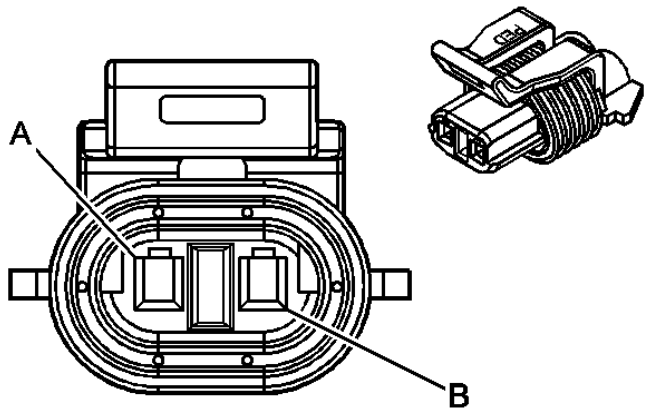

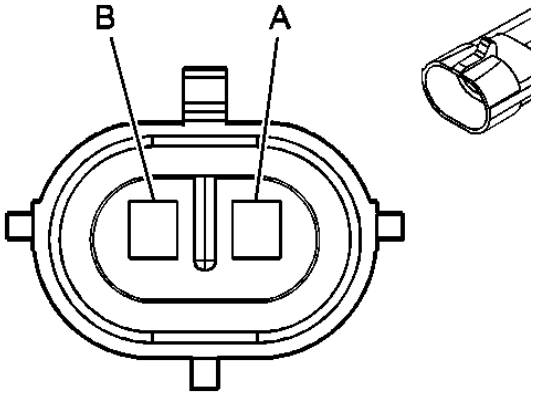

Connector Part Information		• 12052635 • 2-Way F Metri-Pack 150 Series (BLK)		Connector Part Information			
Pin	**Wire Color**	**Circuit No.**	**Function**	**Pin**	**Wire Color**	**Circuit No.**	
A	BLK	40	Battery Positive Voltage	A	ORN	40	Ba
B	BLK	150	Ground	B	BLK	150	Gr

C140 W/O F55 Transmission Harness Terminal Identification To Forward Lamp Harness

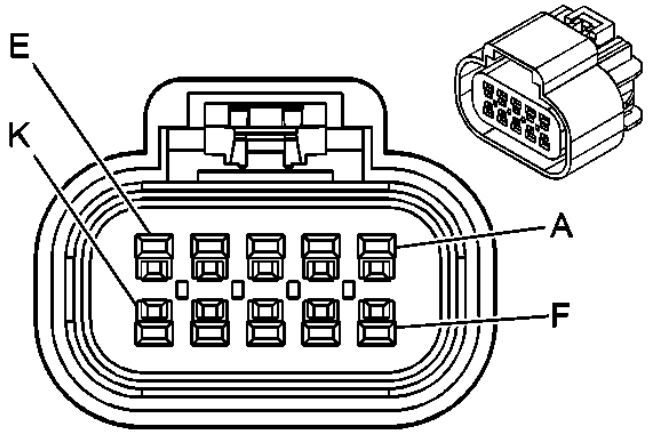

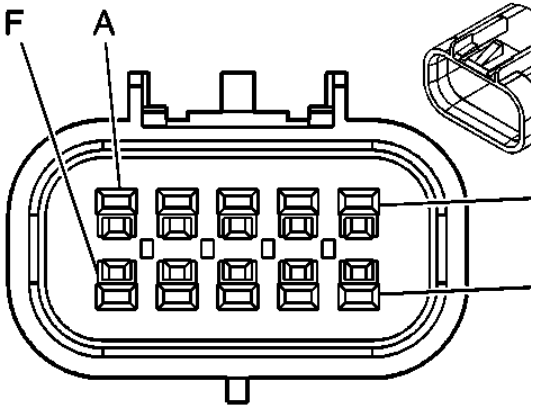

Connector Part		• 15326842 • 10-Way F Metri-Pack 150	Connector Part	

Information		GT Series (BLK)		Information			
Pin	**Wire Color**	**Circuit No.**	**Function**	**Pin**	**Wire Color**	**Circuit No.**	
A	BRN	9	Park Lamp Supply Voltage	A	BRN	9	Park La
B	LT GRN	24	Backup Lamp Supply Voltage	B	LT GRN	24	Backup
C	GRY	120	Fuel Pump Supply Voltage	C	GRY	120	Fuel Pu
D	BRN	641	Ignition 3 Voltage	D	BRN	641	Ignition
E	PNK	339	Ignition 1 Voltage	E	PNK	339	Ignition
F	LT BLU	820	CHMSL Supply Voltage	F	YEL	820	CHMSI
G	GRY	1524	Backup Lamp Supply Voltage	G	GRY	1524	Backup
H	RED	122	Rear Fog Lamp Supply Voltage (Europe)	H	RED	122	Rear Fo (Europe
J-K	-	-	Not Used	J-K	-	-	Not Use

C140 W/F55 Transmission Harness Terminal Identification To Forward Lamp Harness

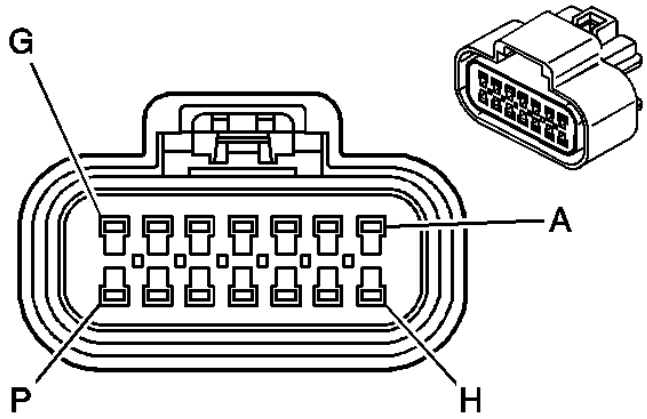

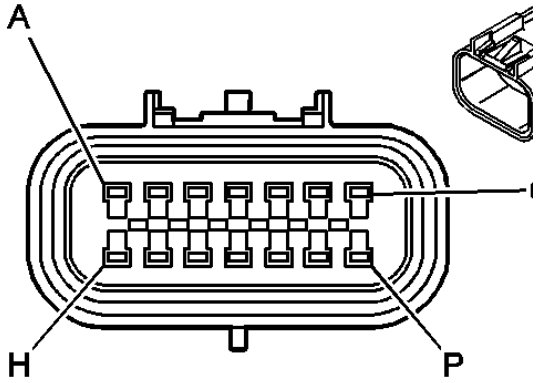

Connector Part Information		• 15326856 • 14-Way F Metri-Pack 150 GT Series (BLK)		Connector Part Information			
Pin	**Wire Color**	**Circuit No.**	**Function**	**Pin**	**Wire Color**	**Circuit No.**	
A	BRN	9	Park Lamp Supply Voltage	A	BRN	9	Park Lar
B	LT GRN	24	Backup Lamp Supply Voltage	B	LT GRN	24	Backup I
C	GRY	120	Fuel Pump Supply Voltage	C	GRY	120	Fuel Pun
D	BRN	641	Ignition 3 Voltage	D	BRN	641	Ignition

E	PNK	339	Ignition 1 Voltage	E	PNK	339	Ignition
F	LT BLU	820	CHMSL Supply Voltage	F	YEL	820	CHMSL
G	GRY	1524	Backup Lamp Supply Voltage	G	GRY	1524	Backup l
H	RED	122	Rear Fog Lamp Supply Voltage (Europe)	H	RED	122	Rear Fog (Europe)
J-K	-	-	Not Used	J-K	-	-	Not Used
L	LT BLU/WHT	1116	Right Front Suspension Damper Solenoid Control	L	LT BLU	1116	Right Fr Solenoid
M	GRY	1117	Right Front Suspension Damper Solenoid Low Reference	M	GRY	1117	Right Fr Solenoid
N	LT BLU/WHT	1107	Left Front Suspension Damper Solenoid Control	N	LT BLU	1107	Left Fro Solenoid
P	GRY	1113	Left Front Suspension Damper Solenoid Low Reference	P	GRY	1113	Left Fro Solenoid

C142 Engine Harness Terminal Identification To Transmission Harness

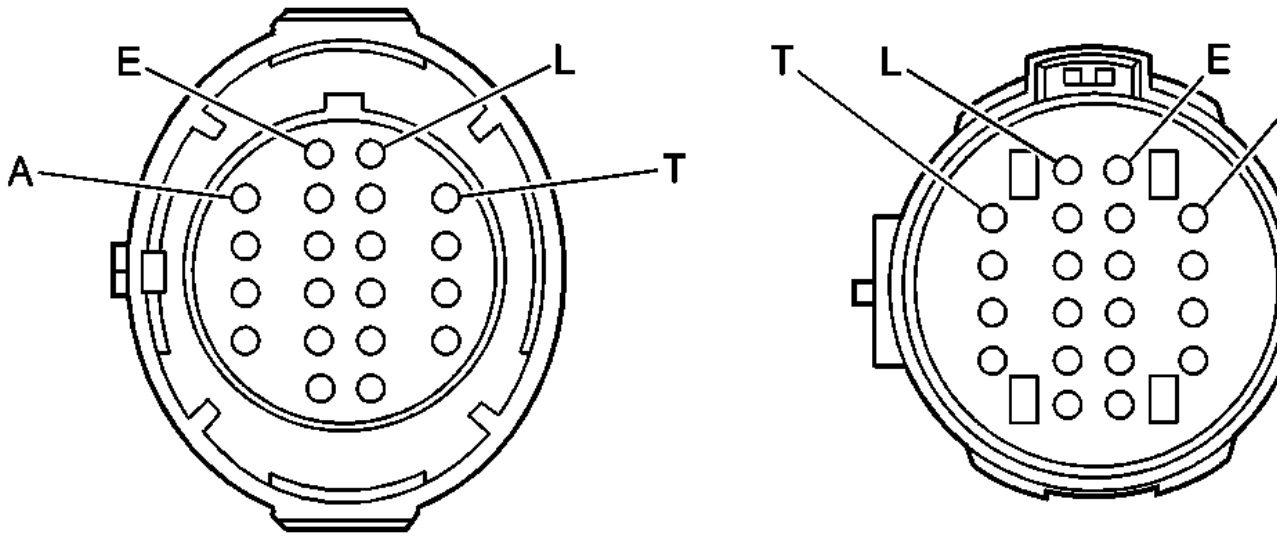

Connector Part Information	• **12160280** • **20-Way F Metri-Pack 100 Series (GRY)**	**Connector Part Information**	•

Pin	Wire Color	Circuit No.	Function	Pin	Wire Color	Circuit No.	F
A	GRY	587	Skip/Shift Solenoid Control	A	GRY	587	Skip/Shif Control
B	YEL	400	Signal High - Front	B	YEL	400	Signal Hi
C	PPL	401	Signal Low - Front	C	PPL	401	Signal Lo
D	YEL/BLK	1227	TFT Sensor Signal	D	YEL/BLK	1227	TFT Sen
E	DK GRN /WHT	817	Vehicle Speed Signal	E	DK GRN /WHT	817	Vehicle S
F-K	-	-	Not Used	F-K	-	-	Not Used
L	DK GRN	890	Fuel Tank Pressure Sensor Signal	L	DK GRN	890	Fuel Tan Signal
M	LT BLU	1937	Fuel Level Sensor Signal-Right	M	LT BLU	1937	Fuel Lev Right
N	PNK/WHT	1101	Damping Lift/Dive Signal	N	PNK/WHT	1101	Damping
P	WHT	1310	Left Rear Position Sensor Signal	P	WHT	1310	Left Rear Signal
R	GRY	598	5 Volt Reference	R	GRY	598	5 Volt Re
S	GRY	720	Low Reference	S	GRY	720	Low Ref
T	LT GRN	1652	Reverse Lockout Solenoid Control	T	LT GRN	1652	Reverse Control
U	DK BLU	1936	Fuel Level Sensor Signal-Secondary	U	DK BLU	1936	Fuel Lev Secondar
V	ORN/BLK	1057	Low Reference (Europe)	V	ORN/BLK	1057	Low Ref
W	-	-	Not Used	W	-	-	Not Used

C144 Engine Harness Terminal Identification To Automatic Transmission Harness (4L60E)

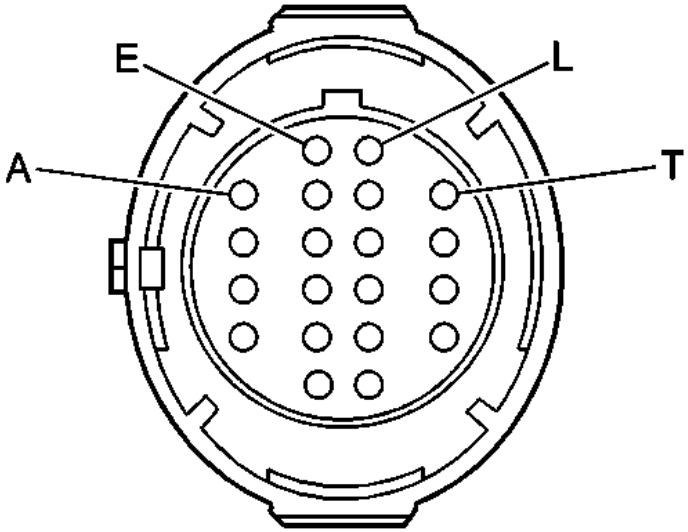

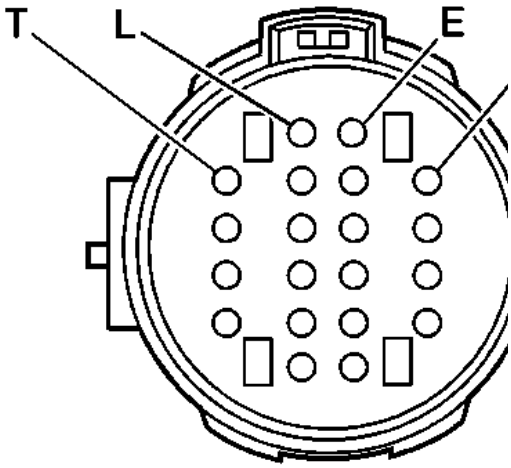

Connector Part Information		• 12160280 • 20-Way F Metri-Pack 100 Series (GRY)		Connector Part Information			
Pin	**Wire Color**	**Circuit No.**	**Function**	**Pin**	**Wire Color**	**Circuit No.**	**F**
A	ORN/BLK	1057	Low Reference	A	ORN/BLK	1057	Low Refe
B	LT GRN	1222	1-2 Shift Solenoid Valve Control	B	LT GRN	1222	1-2 Shift S Control
C	YEL/BLK	1223	2-3 Shift Solenoid Valve Control	C	YEL/BLK	1223	2-3 Shift S Control
D	PNK	1224	Transmission Fluid Pressure Switch Signal A	D	PNK	1224	Transmiss Pressure S
E	DK BLU	1225	Transmission Fluid Pressure Switch Signal B	E	DK BLU	1225	Transmiss Pressure S
F-J	-	-	Not Used	F-J	-	-	Not Used
K	WHT	687	3-2 Shift Solenoid Valve Control	K	WHT	687	3-2 Shift S Control
L	RED	1226	Transmission Fluid Pressure Switch Signal C	L	RED	1226	Transmiss Pressure S
M	YEL/BLK	1227	TFT Sensor Signal	M	YEL/BLK	1227	TFT Sens
N	RED/BLK	1228	PC Solenoid Valve High Control	N	RED/BLK	1228	PC Solen Control

P	LT BLU /WHT	1229	PC Solenoid Valve Low Control	P	LT BLU /WHT	1229	PC Solen Control
R	BLK/WHT	771	Transmission Range Switch Signal A	R	BLK/WHT	771	Transmiss Signal A
S	YEL	772	Transmission Range Switch Signal B	S	YEL	772	Transmiss Signal B
T	GRY	773	Transmission Range Switch Signal C	T	GRY	773	Transmiss Signal C
U	WHT	776	Transmission Range Switch Signal P	U	WHT	776	Transmiss Signal P
V	BRN	418	TCC PWM Solenoid Valve Control	V	BRN	418	TCC PWI Control
W	TAN/BLK	422	TCC Solenoid Valve Control	W	TAN/BLK	422	TCC Sole Control

C146 Transmission Harness Terminal Identification To Instrument Panel Harness

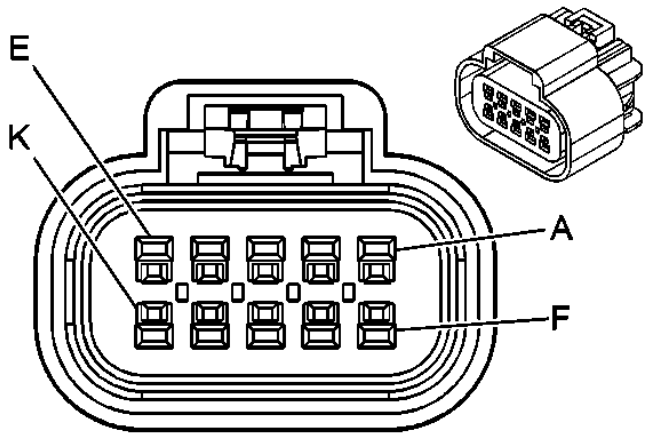

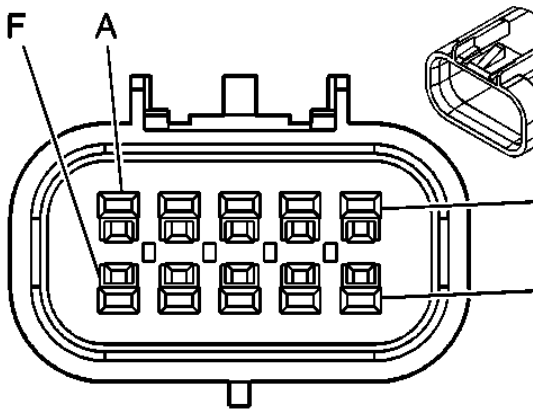

Connector Part Information		• 15326842 • 10-Way F Metri-Pack 150 GT Series (BLK)		Connector Part Information			
Pin	**Wire Color**	**Circuit No.**	**Function**	**Pin**	**Wire Color**	**Circuit No.**	
A	YEL	18	Left Rear Stop/Turn Lamp Supply Voltage	A	YEL	18	Left Rea Voltage
B	DK GRN	19	Right Rear Stop/Turn Lamp Supply Voltage	B	DK GRN	19	Right R Voltage
C	YEL	269	Starter Enable Relay Coil Supply Voltage	C	YEL	269	Starter I Voltage
D	PPL	1606	Crank Voltage	D	PPL	1606	Crank V

E	BRN	341	Ignition 3 Voltage	E	BRN	341	Ignition
F	ORN/BLK	434	Neutral Safety Switch Signal Selective Ride Control Switch Signal	F	ORN/BLK	434	Neutral
G	TAN/WHT	1384	Electronic Traction Suspension Control Switch Input	G	TAN/WHT	1384	Selectiv
H	PNK/BLK	1385	Ground	H	PNK/BLK	1385	Ground
J	DK BLU /WHT	1126	SCM (Suspension) Class 2 Serial Data	J	DK BLU /WHT	1126	SCM (S Data
K	BLK/WHT	851	Ground	K	BLK/WHT	851	Ground

C148 Transmission Harness Terminal Identification To Forward Lamp Harness

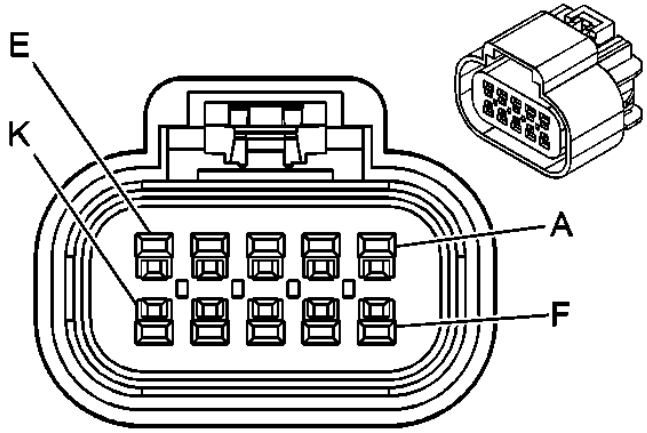

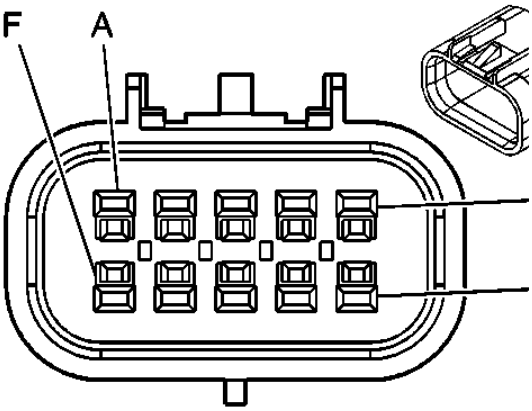

Connector Part Information		• 15326842 • 10-Way F Metri-Pack 150 GT Series (BLK)		Connector Part Information			
Pin	**Wire Color**	**Circuit No.**	**Function**	**Pin**	**Wire Color**	**Circuit No.**	
A	BLK	884	Left Rear Wheel Speed Sensor Signal	A	BLK	884	Left Rea
B	RED	885	Left Rear Wheel Speed Sensor Low Reference	B	RED	885	Left Rea Referen
C	BRN	882	Right Rear Wheel Speed Sensor Signal	C	BRN	882	Right R Signal
D	WHT	883	Right Rear Wheel Speed Sensor Low Reference	D	WHT	883	Right R Referen
E	LT BLU	830	Left Front Wheel Speed Sensor Signal	E	LT BLU	830	Left Fro

F	YEL	873	Left Front Wheel Speed Sensor Low Reference	F	YEL	873	Left Fro Referen
G	DK GRN	872	Right Front Wheel Speed Sensor Signal	G	DK GRN	872	Right Fr Signal
H	TAN	833	Right Front Wheel Speed Sensor Low Reference	H	TAN	833	Right Fr Referen
J	LT BLU	2627	Steering Position Sensor Signal	J	LT BLU	2627	Steering
K	-	-	Not Used	K	-	-	Not Use

C150 Forward Lamp Harness Terminal Identification To Engine Harness

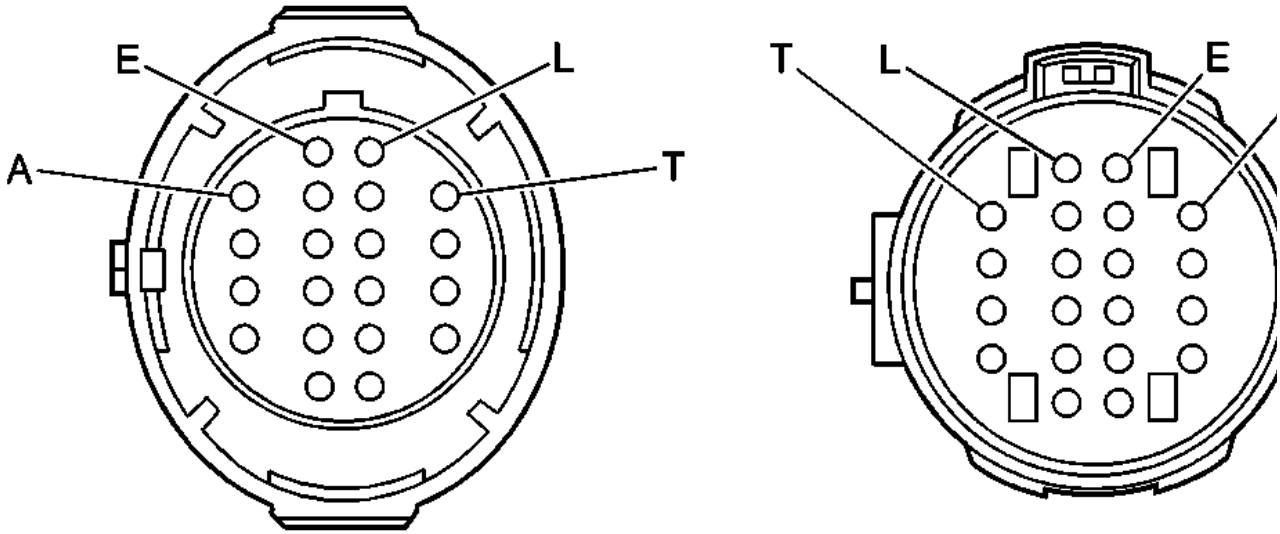

Connector Part Information		• 12160280 • 20-Way F Metri-Pack 100 Series (GRY)		Connector Part Information			
Pin	**Wire Color**	**Circuit No.**	**Function**	**Pin**	**Wire Color**	**Circuit No.**	**F**
A	RED/BLK	380	A/C Refrigerant Pressure Sensor Signal	A	RED/BLK	380	A/C Refr Sensor Si
B	GRY	474	5 Volt Reference	B	GRY	474	5 Volt Re
C	BLK	407	Low Reference	C	BLK	407	Low Refe
D	ORN/BLK	463	Requested Torque Signal	D	ORN/BLK	463	Requeste
E	TAN/BLK	464	Delivered Torque Signal	E	TAN/BLK	464	Delivere

F-K	-	-	Not Used	F-K	-	-	Not Used
L	DK GRN /WHT	817	Vehicle Speed Signal	L	DK GRN /WHT	817	Vehicle S
M	DK GRN	1049	PCM Class 2 Serial Data	M	DK GRN	1049	PCM Cla
N	DK GRN /WHT	762	A/C Request Signal	N	DK GRN /WHT	762	A/C Requ
P	DK GRN /WHT	357	Oil Temperature Sensor Signal	P	DK GRN /WHT	357	Oil Temp Signal
R	BLK	470	Low Reference	R	BLK	470	Low Refe
S	GRY	48	CPP Switch Signal	S	GRY	48	CPP Swit
T	GRY	847	Extended Travel Brake Switch Signal	T	GRY	847	Extended Switch Si
U-W	-	-	Not Used	U-W	-	-	Not Used

C152 Forward Lamp Harness Terminal Identification To Brake Fluid Pressure Sensor Jumper Harness

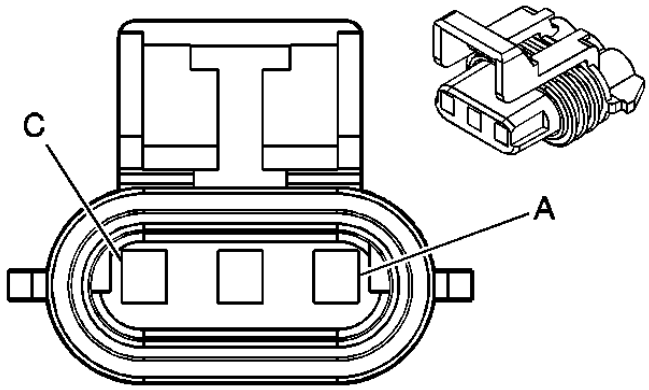

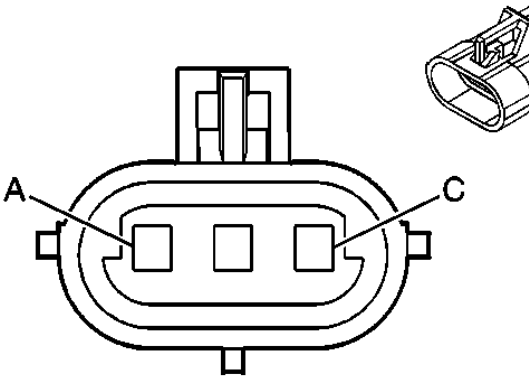

Connector Part Information				Connector Part Information			
	• **12110293** • **3-Way F Metri-Pack 150 Series (BLK)**						
Pin	**Wire Color**	**Circuit No.**	**Function**	**Pin**	**Wire Color**	**Circuit No.**	
A	GRY	1056	Steering Wheel Position Sensor 5V Reference Voltage	A	ORN	1056	Steering Referenc
B	BLK	2626	Brake Pressure Sensor Signal	B	BLK	2626	Brake Pr
C	ORN/ BLK	556	Low Reference	C	GRY	556	Low Ref

C200 Instrument Panel Harness To Terminal Identification RH Door Harness

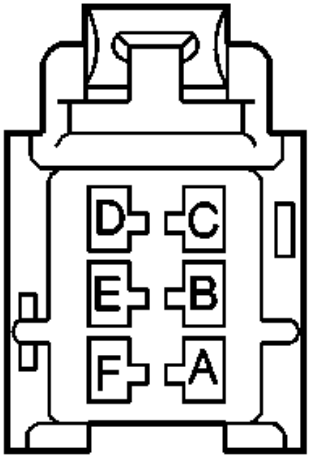

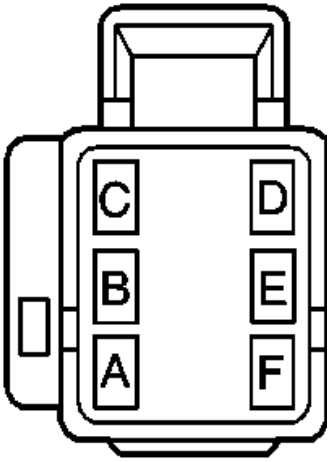

Connector Part Information		• 12064752 • 6-Way F Metri-Pack 280 Series (BLK)		Connector Part Information			
Pin	**Wire Color**	**Circuit No.**	**Function**	**Pin**	**Wire Color**	**Circuit No.**	**F**
A	ORN	2240	Battery Positive Voltage	A	ORN	2240	Battery P
B	BLK	150	Ground	B	BLK	150	Ground
C	ORN	2340	Battery Positive Voltage	C	ORN	2340	Battery P
D	TAN	1047	PDM Class 2 Serial Data	D	TAN	1047	PDM Cla
E	BLK	150	Ground	E	BLK	150	Ground
F	BLK/WHT	746	Right Front Door Ajar Switch Signal	F	BLK/WHT	746	Right Fro Switch S
F	BLK/WHT	746	Right Front Door Ajar Switch Signal				

C201 Instrument Panel Harness To Terminal Identification LH Door Harness

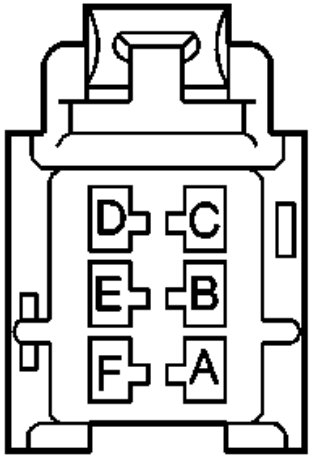

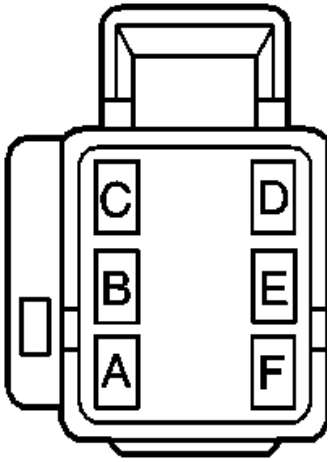

Connector Part Information		• 12064752 • 6-Way F Metri-Pack 280 Series (BLK)		Connector Part Information			
Pin	**Wire Color**	**Circuit No.**	**Function**	**Pin**	**Wire Color**	**Circuit No.**	
A	ORN	2640	Battery Positive Voltage	A	ORN	2640	Battery P
B	BLK	150	Ground	B	BLK	150	Ground
C	ORN	2140	Battery Positive Voltage	C	ORN	2140	Battery P
D	BRN	1046	DDM Class 2 Serial Data	D	BRN	1046	DDM Cl
E	BLK	150	Ground	E	BLK	150	Ground
F	GRY/BLK	745	Left Front Door Ajar Switch Signal	F	GRY/BLK	745	Left Fron Switch S
F	GRY/BLK	745	Left Front Door Ajar Switch Signal				

C202 Instrument Panel Harness To Terminal Identification RH Door Harness

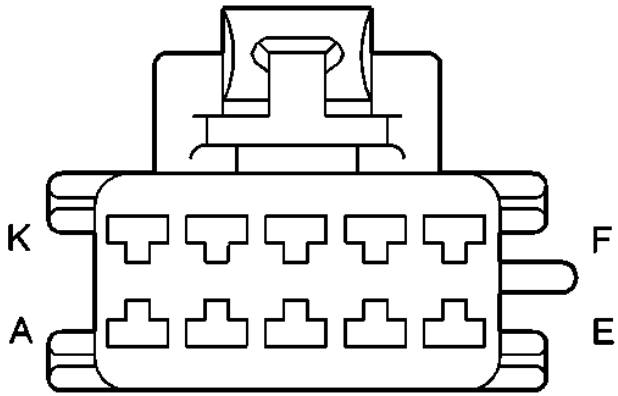

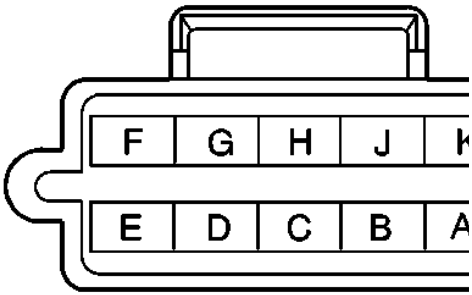

Connector Part Information		• 12064871 • 10-Way F Metri-Pack 150 Series (BLU)		Connector Part Information			
Pin	**Wire Color**	**Circuit No.**	**Function**	**Pin**	**Wire Color**	**Circuit No.**	**F**
A	LT GRN	200	Right Front Speaker Output (+)	A	LT GRN	200	Right Fro Output (+
B	DK GRN	117	Right Front Speaker Output (-)	B	DK GRN	117	Right Fro Output (-
C	BLK/WHT	351	Ground	C	BLK/WHT	351	Ground
D	ORN	360	Speaker Supply Voltage	D	ORN	360	Speaker S
E	BLK/WHT	351	Ground	E	BLK/WHT	351	Ground
F-G	-	-	Not Used	F-G	-	-	Not Used
H	ORN/BLK	1726	Audio Signal-RH Subwoofer	H	YEL	1726	Audio Sig Subwoofe
J	LT GRN	512	Right Front Low Level Audio Signal (+)	J	LT GRN	512	Right Fro Audio Sig
K	Bare	514	Ground	K	Bare	514	Ground

C203 Instrument Panel Harness To Terminal Identification LH Door Harness

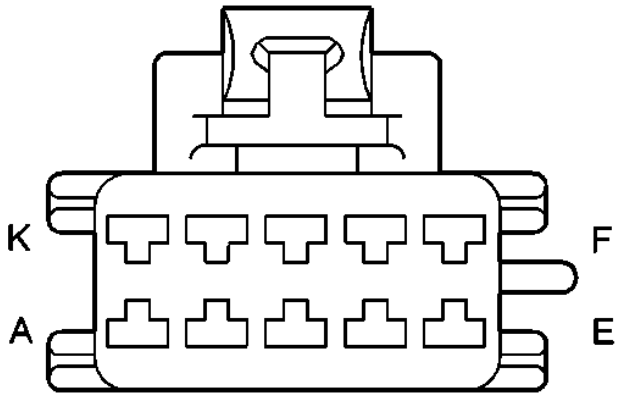

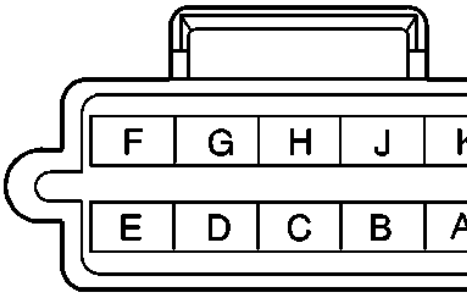

Connector Part Information		• 12064871 • 10-Way F Metri-Pack 150 Series (BLU)		Connector Part Information			
Pin	**Wire Color**	**Circuit No.**	**Function**	**Pin**	**Wire Color**	**Circuit No.**	**F**
A	TAN	201	Left Front Speaker Output (+)	A	TAN	201	Left Fron (+)
B	GRY	118	Left Front Speaker Output (-)	B	GRY	118	Left Fron (-)
C	BLK/WHT	351	Ground	C	BLK/WHT	351	Ground
D	ORN	360	Speaker Supply Voltage	D	ORN	360	Speaker S
E	BLK/WHT	351	Ground	E	BLK/WHT	351	Ground
F	GRY	1690	Automatic Day-Night Mirror Signal	F	GRY	1690	Automati Mirror Si
G	PNK	1691	Automatic Day-Night Mirror Low Reference	G	PNK	1691	Automati Mirror Lo
H	TAN	511	Left Front Low Level Audio Signal (+)	H	TAN	511	Left Fron Audio Si
J	BLK	1725	Audio Signal-LH Subwoofer	J	BLK	1725	Audio Si Subwoofe
K	Bare	514	Ground	K	Bare	514	Ground

C204 Instrument Panel Harness Terminal Identification To Front Body Harness

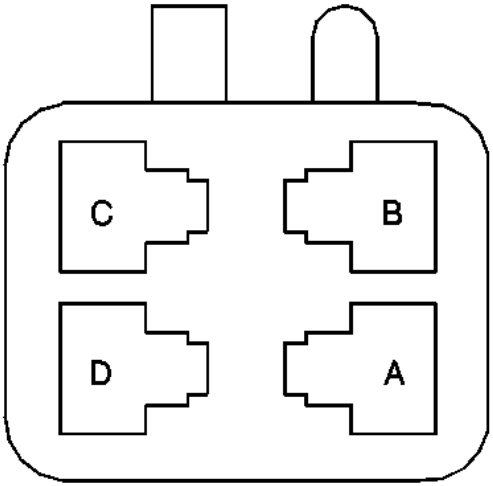

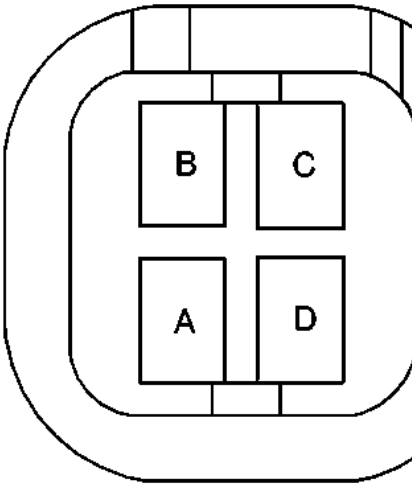

Connector Part Information		• 12047785 • 4-Way F Metri-Pack 150 Series (BLK)		Connector Part Information			
Pin	**Wire Color**	**Circuit No.**	**Function**	**Pin**	**Wire Color**	**Circuit No.**	
A	BRN/WHT	367	Remote Radio Left Audio Signal	A	BRN/WHT	367	Remote Signal
B	DK GRN /WHT	368	Remote Radio Right Audio Signal	B	DK GRN /WHT	368	Remote Audio Si
C	BLK/WHT	372	Remote Radio Audio Output (-)	C	BLK/WHT	372	Remote Output (-
D	Bare	514	Ground	D	Bare	514	Ground

C207 Instrument Panel Harness Terminal Identification To Steering Column Harness

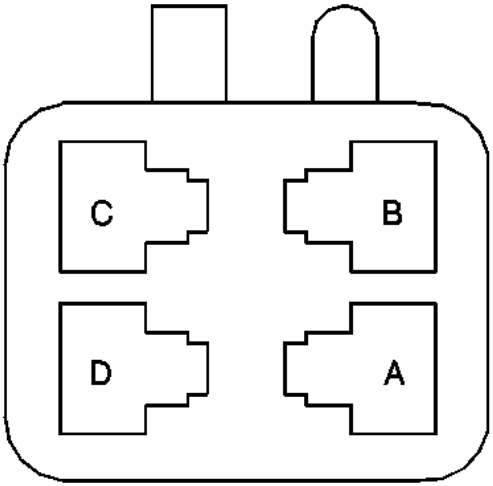

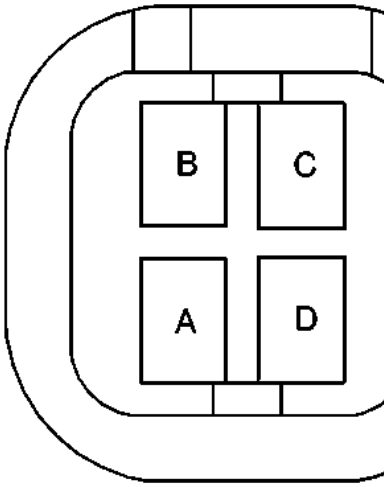

Connector Part Information		• 12047785 • 4-Way F Metri-Pack 150 Series (BLK)		Connector Part Information			
Pin	**Wire Color**	**Circuit No.**	**Function**	**Pin**	**Wire Color**	**Circuit No.**	
A	BLK	150	Ground	A	BLK	150	Ground
B	LT GRN	1601	Steering Column Lock Signal	B	LT GRN	1601	Steering C
C	PPL	1604	Steering Column Unlock	C	PPL	1604	Steering C
D	ORN	2630	Steering Column Lock (Domestic and Export Manual Transmission)	D	WHT	2630	Steering C (Domestic Transmiss
	ORN	1603	Steering Column Lock (Domestic Automatic Transmission)		ORN	1603	Steering C (Domestic Transmiss

C208 Instrument Panel Harness Terminal Identification To Steering Column Harness

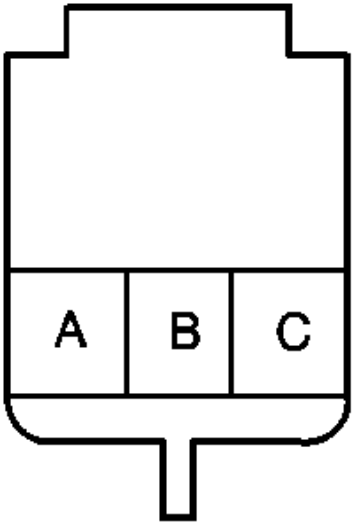

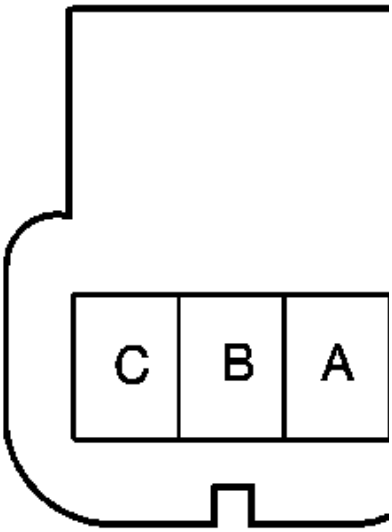

Connector Part Information		• 12064758 • 3-Way F Metri-Pack 150 Series (BLK)		Connector Part Information			
Pin	**Wire Color**	**Circuit No.**	**Function**	**Pin**	**Wire Color**	**Circuit No.**	
A	ORN	2094	Steering Column Tilt and Telescope Forward Switch Signal	A	PNK	2094	Steering C Telescope Signal
B	PNK	2095	Steering Column Tilt and Telescope Reverse Switch Signal	B	ORN	2095	Steering C Telescope Signal
C	BLK	150	Ground	C	BLK	150	Ground

C209 Instrument Panel Harness Terminal Identification To Steering Column Harness

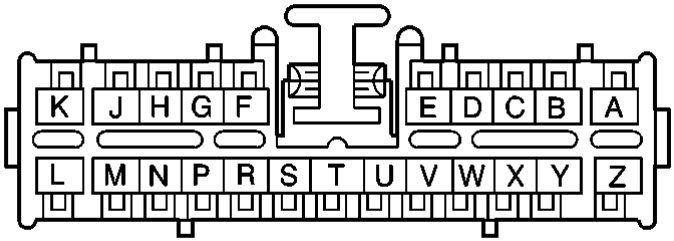

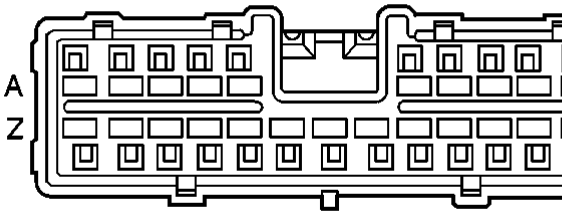

Connector Part Information		• 12092249 • 23-Way F Metri-Pack 280 Series (BLK)		Connector Part Information		•	
Pin	**Wire Color**	**Circuit No.**	**Function**	**Pin**	**Wire Color**	**Circuit No.**	
A	WHT	27	Hazard Flasher Signal	A	BRN	27	Hazard Fl
B	DK GRN	19	Right Rear Stop/Turn Lamp Supply Voltage	B	DK GRN	19	Right Rea Supply V
C	YEL	18	Left Rear Stop/Turn Lamp Supply Voltage	C	YEL	18	Left Rear Supply V
D	PPL	16	Turn Signal Flasher Signal	D	PPL	16	Turn Sign
E	-	-	Not Used	E	-	-	Not Used
F	DK BLU	15	Right Turn Signal Status Signal	F	DK BLU	15	Right Tur Signal
G	LT BLU	14	Left Turn Signal Status Signal	G	LT BLU	14	Left Turn Signal
H	DK BLU	38	Backup Lamp Relay Control	H	DK BLU	38	Backup L
J	BLK	58	Right Cornering Lamp Supply Voltage	J	BLK	58	Right Co Supply V
K	LT GRN	11	Headlamp High Beam Supply Voltage	K	LT GRN	11	Headlamp Supply V
					LT GRN	11	Headlamp Supply V
L	TAN	12	Headlamp Low Beam Supply Voltage	L	TAN	12	Headlamp Voltage
M	-	-	Not Used	M	-	-	Not Used
N	BLK	150	Ground	N	BLK	150	Ground
P	-	-	Not Used	P	-	-	Not Used
R	BRN	9	Park Lamp Supply Voltage	R	BRN	9	Park Lam
S	WHT	103	Headlamp Switch Headlamps On Signal	S	WHT	103	Headlamp On Signa

T	DK GRN	306	Headlamp Switch Headlamps Off Signal	T	DK GRN	306	Headlamp Off Signa
U	ORN	57	Left Cornering Lamp Supply Voltage	U	ORN	57	Left Corn Voltage
V	BLK	28	Horn Relay Control	V	BLK	28	Horn Rel
W	RED	842	Battery Positive Voltage	W	RED	842	Battery P
X	RED	842	Battery Positive Voltage	X	RED	842	Battery P
Y	LT BLU	74	Park Lamp Switch Signal	Y	LT BLU	74	Park Lam
Z	ORN	240	Battery Positive Voltage	Z	ORN	240	Battery P

C210 Instrument Panel Harness Terminal Identification To Steering Column Harness

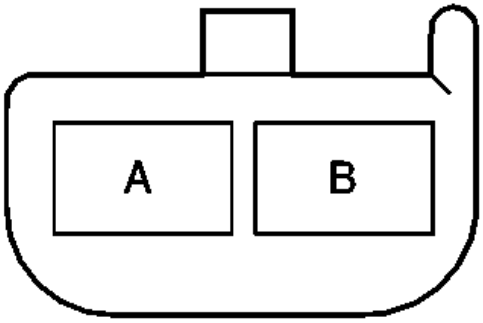

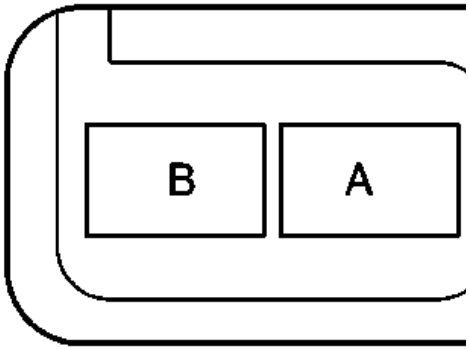

Connector Part Information		• 12047662 • 2-Way F Metri-Pack 150 Series (BLK)		Connector Part Information			
Pin	**Wire Color**	**Circuit No.**	**Function**	**Pin**	**Wire Color**	**Circuit No.**	
A	RED	2098	Steering Column Telescope Motor Forward	A	RED	2098	Steering Motor Fo
B	BLK	2110	Steering Column Telescope Motor Reverse	B	BLK	2110	Steering Motor Re

C211 Instrument Panel Harness Terminal Identification To Inflatable Restraint Steering Wheel Module Coil

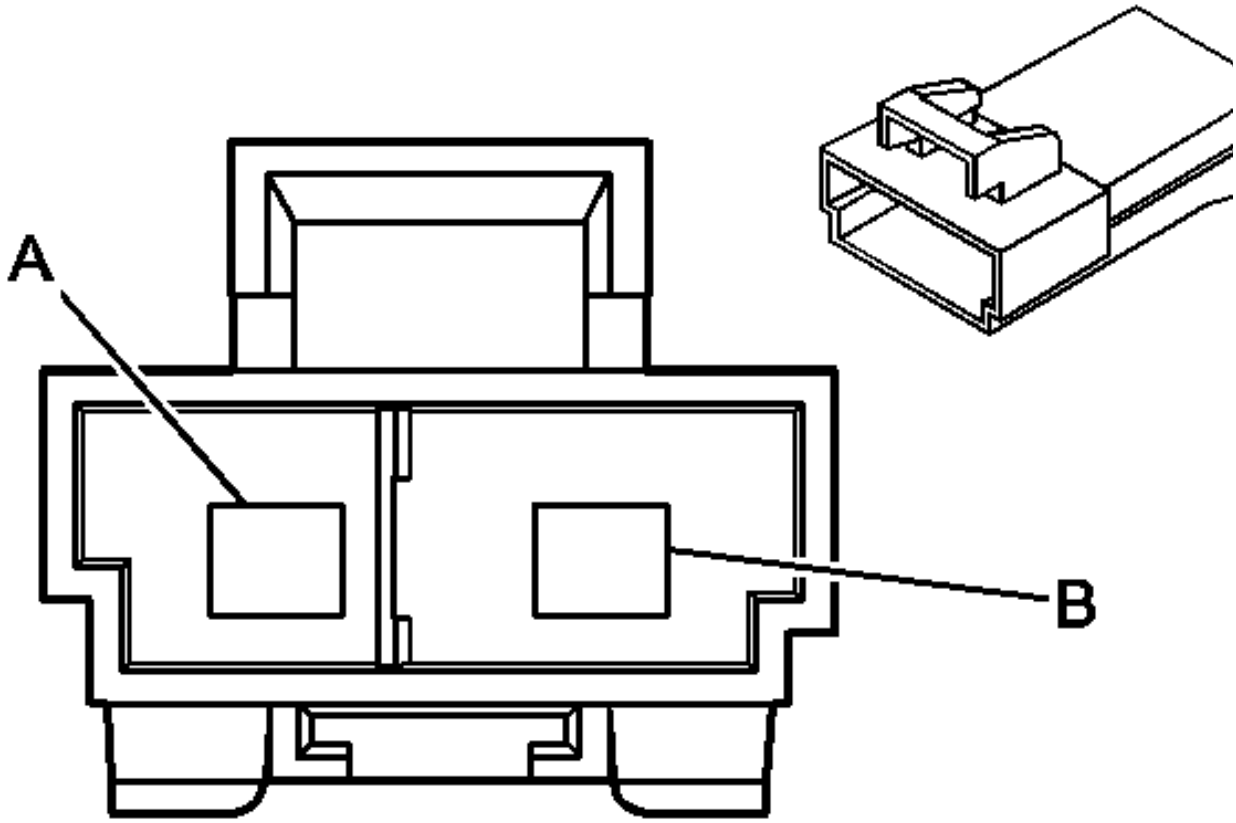

Connector Part Information		• 12077923 • 2-Way F Metri-Pack 280 Series (YEL)		Connector Part Information			
Pin	**Wire Color**	**Circuit No.**	**Function**	**Pin**	**Wire Color**	**Circuit No.**	
A	WHT	347	Steering Wheel Module - High Control	A	WHT	347	Steering High Co
B	DK GRN	348	Steering Wheel Module - Low Control	B	DK GRN	348	Steering Low Co

C212 Instrument Panel Harness Terminal Identification To Steering Column Harness

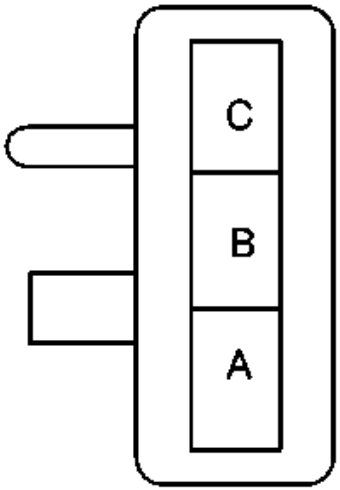

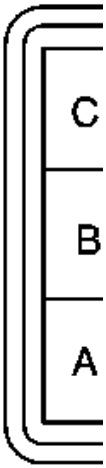

Connector Part Information		• 12047781 • 3-Way F Metri-Pack 150 Series (BLK)		Connector Part Information			
Pin	**Wire Color**	**Circuit No.**	**Function**	**Pin**	**Wire Color**	**Circuit No.**	
A	PPL	1985	5 Volt Reference	A	PPL	1985	5 Volt Re
B	BLK	782	Memory Seat/Mirror Sensor Low Reference	B	BLK	782	Memory Low Refe
C	ORN	2153	Steering Column Telescope Motor Signal	C	ORN	2153	Steering Motor Sig

C213 Instrument Panel Harness Taped Terminal Identification To Instrument Panel Harness

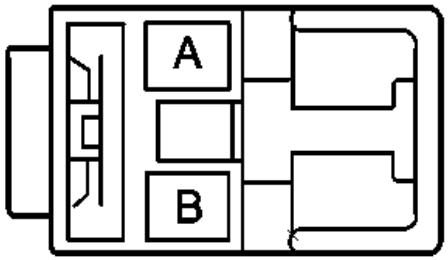

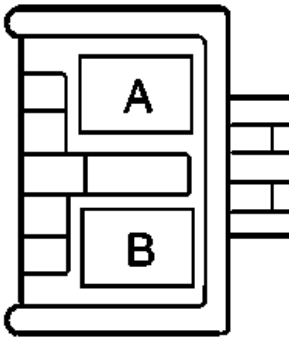

Connector Part Information		• 12077921 • 2-Way F Metri-Pack 280 Series (YEL)		Connector Part Information			
Pin	**Wire Color**	**Circuit No.**	**Function**	**Pin**	**Wire Color**	**Circuit No.**	
A	WHT/BLK	1403	I/P Module - High Control	A	WHT/BLK	1403	I/P Mod Control
B	DK GRN /WHT	1404	I/P Module - Low Control	B	DK GRN /WHT	1404	I/P Mod Control

C215 Instrument Panel Harness Terminal Identification To Hazard Warning Switch Jumper Harness

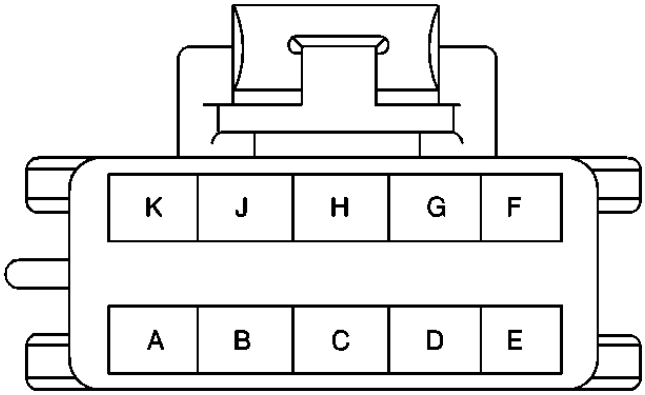

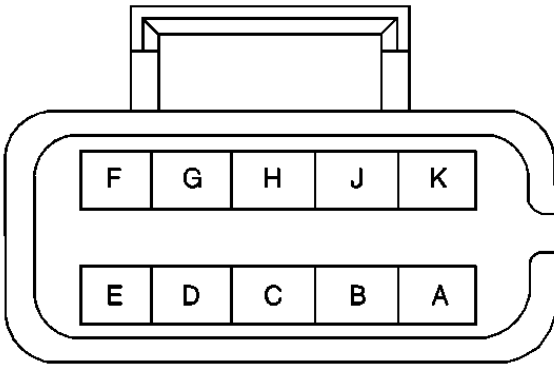

Connector Part Information		• 12064769 • 10-Way F Metri-Pack 150 Series (NAT)		Connector Part Information			
Pin	**Wire Color**	**Circuit No.**	**Function**	**Pin**	**Wire Color**	**Circuit No.**	
A	BLK	150	Ground	A	BLK	150	Ground
B	ORN	140	Battery Positive Voltage	B	ORN	140	Battery
C	PNK	1739	Ignition 1 Voltage	C	PNK	1739	Ignition
D	-	-	Not Used	D	-	-	Not Us
E	GRY/BLK	1458	Hazard Switch Signal	E	GRY/BLK	1458	Hazard
F	LT BLU	14	Left Turn Signal Status Signal	F	LT BLU	14	Left Tu Signal
G	DK BLU	15	Right Turn Signal Status Signal	G	DK BLU	15	Right T Signal
H	PPL	16	Turn Signal Flasher Signal	H	PPL	16	Turn Si
J	BRN	27	Hazard Flasher Signal	J	BRN	27	Hazard
K	WHT	17	Stop Lamp Switch Signal	K	WHT	17	Stop La

C217 Instrument Panel Harness Terminal Identification To Steering Column Harness

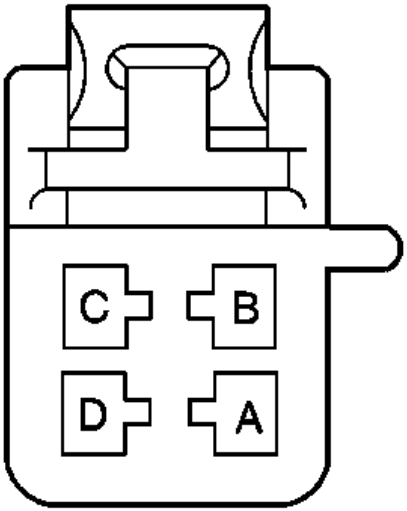

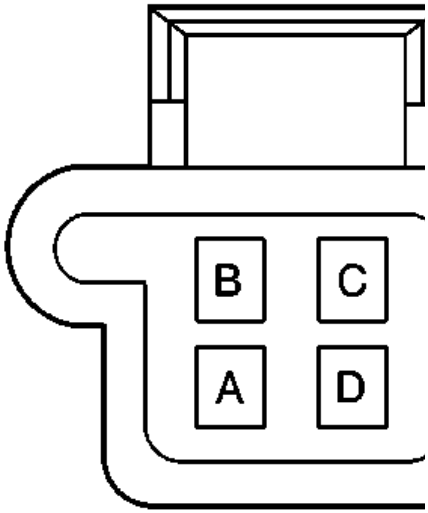

Connector Part Information		• 12064760 • 4-Way F Metri-Pack 150 Series (BLK)		Connector Part Information			

Pin	Wire Color	Circuit No.	Function	Pin	Wire Color	Circuit No.	F
A	GRY	397	Cruise Control On Switch Signal	A	GRY	397	Cruise Co Signal
B	PNK/BLK	1239	Ignition 1 Voltage	B	PNK	1239	Ignition 1
C	DK BLU	84	Cruise Control Set/Coast Switch Signal	C	DK BLU	84	Cruise Co Switch Si
D	GRY/BLK	87	Cruise Control Resume/Accel Switch Signal	D	GRY/BLK	87	Cruise Co Resume/A Signal

C219 Instrument Panel Harness Terminal Identification To Steering Column Harness

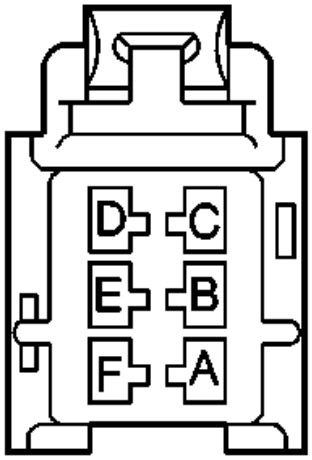

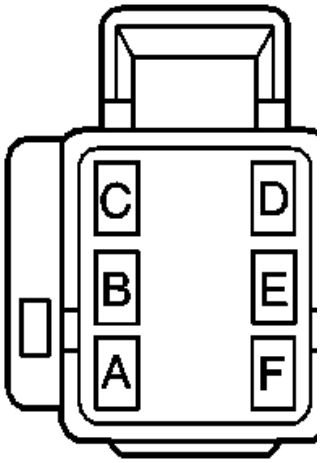

Connector Part Information		• 12064752 • 6-Way F Metri-Pack 280 Series (BLK)		Connector Part Information			•
Pin	**Wire Color**	**Circuit No.**	**Function**	**Pin**	**Wire Color**	**Circuit No.**	
A	DK GRN	95	Windshield Wiper Motor Low Speed	A	DK GRN	95	Windshi Low Spe
B	GRY	91	Windshield Wiper Switch Signal 2	B	GRY	91	Windshi Signal 2
C	YEL	143	Accessory Voltage	C	YEL	143	Accesso
					YEL	143	Accesso
			Windshield Wiper Motor				Windshi

D	PPL	92	High Speed	D	PPL	92	High Spe
E	PNK	94	Windshield Washer Switch Signal	E	PNK	94	Windshi Signal
F	-	-	Not Used	F	-	-	Not Use

C220 Instrument Panel Harness Terminal Identification To Vanity Mirror Jumper Harness

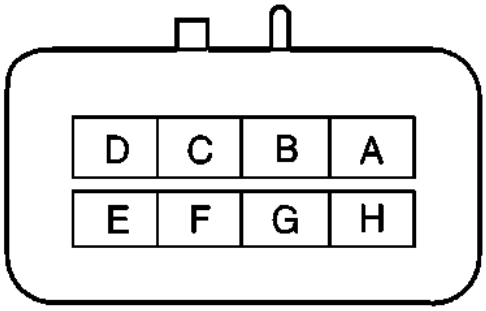

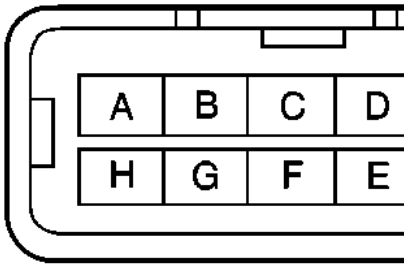

Connector Part Information		• 12047886 • 8-Way F Metri-Pack 150 Series (BLK)		Connector Part Information			
Pin	**Wire Color**	**Circuit No.**	**Function**	**Pin**	**Wire Color**	**Circuit No.**	
A	ORN	640	Battery Positive Voltage	A	ORN	640	Battery P
B	BLK	150	Ground	B	BLK	150	Ground
C	LT GRN	24	Backup Lamp Supply Voltage	C	LT GRN	24	Backup L Voltage
D	GRY	1690	Automatic Day/Night Mirror Signal	D	GRY	1690	Automati Signal
E	PNK	1691	Automatic Day/Night Mirror Low Reference	E	PNK	1691	Automati Low Refe
F	ORN	740	Battery Positive Voltage	F	ORN	740	Battery P
G	BRN	341	Ignition 3 Voltage	G	BRN	341	Ignition 3
H	-	-	Not Used	H	-	-	Not Used

C301 Instrument Panel Harness Terminal Identification To Drivers Seat Harness

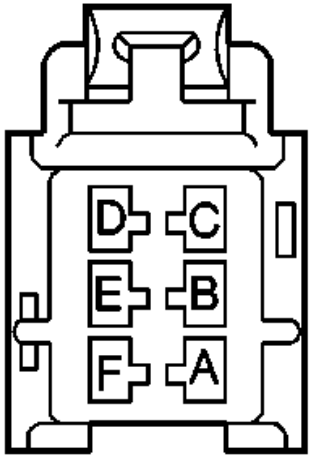

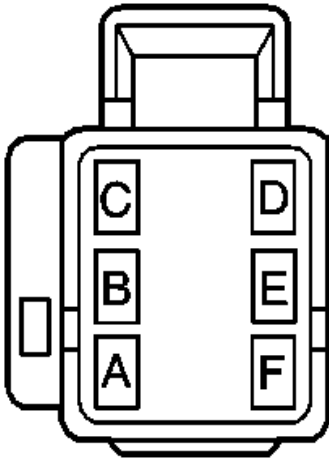

Connector Part Information		• 12064752 • 6-Way F Metri-Pack 280 Series (BLK)		Connector Part Information			
Pin	**Wire Color**	**Circuit No.**	**Function**	**Pin**	**Wire Color**	**Circuit No.**	
A	BLK/WHT	238	Seat Belt Switch Signal - Driver	A	BLK/WHT	238	Seat Bel Driver
					BLK/WHT	238	Seat Bel Driver
B	BRN/WHT	1048	SCM (Seat) Class 2 Serial Data	B	BRN/WHT	1048	SCM (S Data
C	ORN	1840	Battery Positive Voltage	C	ORN	1840	Battery
D	BLK	150	Ground	D	BLK	150	Ground
	BLK	150	Ground (W/AR9)				
E	ORN	1740	Battery Positive Voltage	E	ORN	1740	Battery
	ORN	1740	Battery Positive Voltage				
F	ORN	1140	Battery Positive Voltage	F	ORN	1140	Battery

C302 Front Body Harness Terminal Identification To Passengers Seat Harness

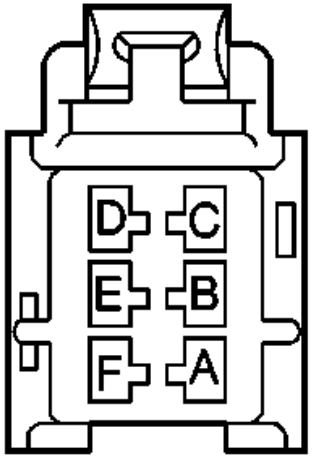

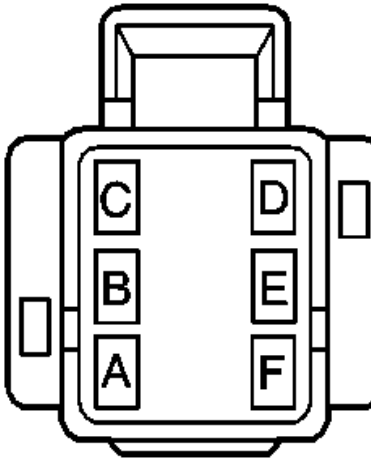

Connector Part Information		• 12064752 • 6-Way F Metri-Pack 280 Series (BLK)		Connector Part Information		• [illegible]	
Pin	**Wire Color**	**Circuit No.**	**Function**	**Pin**	**Wire Color**	**Circuit No.**	**Fun**
A-B	-	-	Not Used	A-B	-	-	Not Used
C	ORN	1440	Battery Positive Voltage	C	ORN	1440	Battery P Voltage
D	BLK	150	Ground	D	BLK	150	Ground
	BLK	150	Ground				
E	-	-	Not Used	E	-	-	Not Used
F	ORN	1140	Battery Positive Voltage	F	ORN/BLK	1140	Battery P Voltage

C303 Instrument Panel Harness Terminal Identification To Drivers Seat Harness

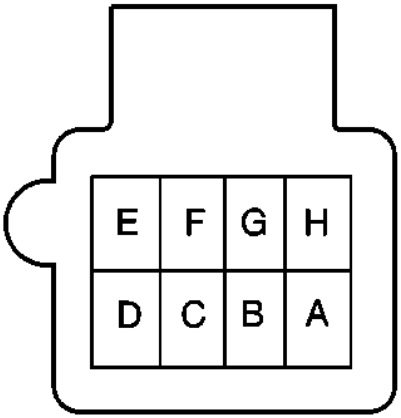

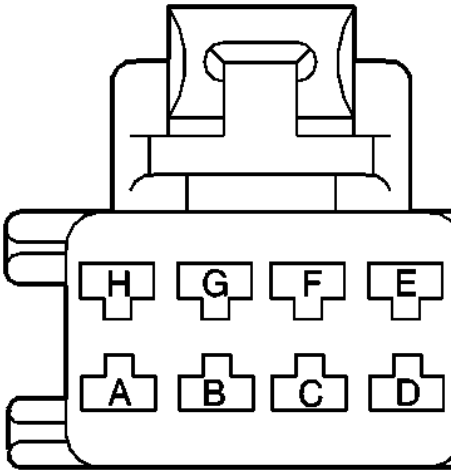

Connector Part Information		• 12064766 • 8-Way F Metri-Pack 150 Series (BLU)		Connector Part Information			
Pin	**Wire Color**	**Circuit No.**	**Function**	**Pin**	**Wire Color**	**Circuit No.**	
A	RED	2098	Steering Column Telescope Motor Forward	A	RED	2098	Steering C Motor For
B	BLK	2110	Steering Column Telescope Motor Reverse	B	BLK	2110	Steering C Motor Rev
C	PPL	1985	Steering Column Telescope Motor 5 Volt Reference	C	PPL	1985	Steering C Motor 5 V
D	BLK	782	Memory Seat/Mirror Sensor Low Reference	D	BLK	782	Memory S Low Refe
E	ORN	2153	Steering Column Telescope Motor Signal	E	ORN	2153	Steering C Motor Sig
F	PNK	2094	Steering Column Tilt and Telescope Forward Switch Signal	F	PNK	2094	Steering C Telescope Signal
G	ORN	2095	Steering Column Tilt and Telescope Reverse Switch Signal	G	ORN	2095	Steering C Telescope Signal
H	-	-	Not Used	H	-	-	Not Used

C400 Transmission Harness Terminal Identification To Rear Body Harness

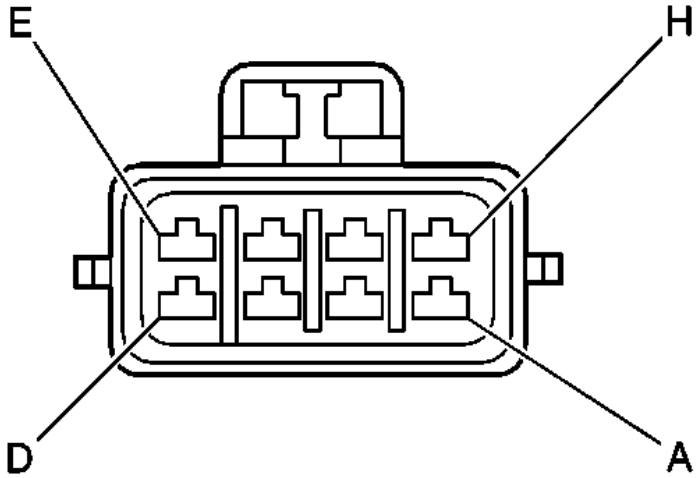

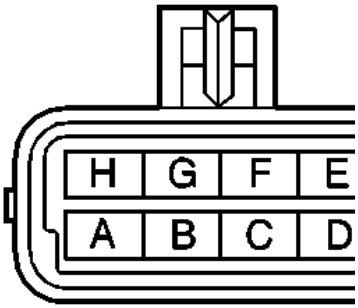

Connector Part Information		• 12047932 • 8-Way F Metri-Pack 150 Series (BLK)		Connector Part Information			
Pin	**Wire Color**	**Circuit No.**	**Function**	**Pin**	**Wire Color**	**Circuit No.**	
A	BLK	150	Ground	A	BLK	150	Ground
B	YEL	820	CHMSL Supply Voltage	B	YEL	820	CHMSL
C	LT GRN	24	Backup Lamp Supply Voltage	C	LT GRN	24	Backup L Voltage
D	YEL	18	Left Rear Stop/Turn Lamp Supply Voltage	D	YEL	18	Left Rear Supply V
E	BRN	9	Park Lamp Supply Voltage	E	BRN	9	Park Lam
F	-	-	Not Used	F	-	-	Not Used
G	DK GRN	19	Right Rear Stop/Turn Lamp Supply Voltage	G	DK GRN	19	Right Rea Supply V
H	RED	122	Rear Fog Lamp Supply Voltage (Europe)	H	RED	122	Rear Fog Voltage (

C402 Transmission Harness Terminal Identification To Fuel Tank Jumper Harness

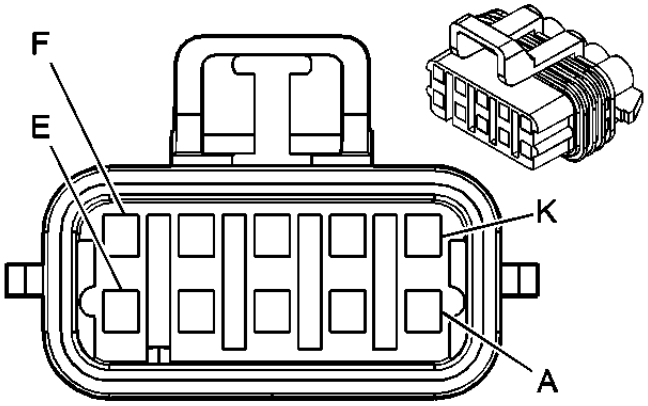

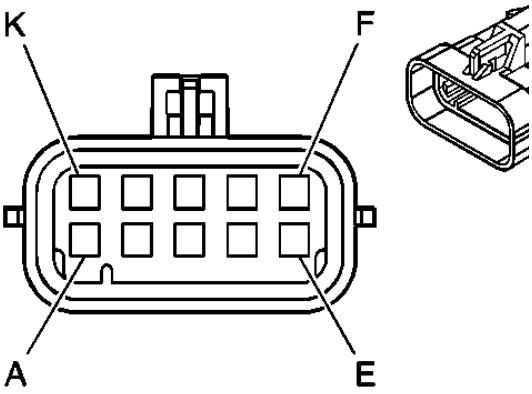

Connector Part Information		• 12186688 • 10-Way F Metri-Pack 150 Series (BLK)		Connector Part Information			
Pin	**Wire Color**	**Circuit No.**	**Function**	**Pin**	**Wire Color**	**Circuit No.**	
A	PNK	339	Ignition 1 Voltage	A	PNK	339	Ignitior
B	WHT	1310	EVAP Canister Vent Solenoid Control	B	WHT	1310	EVAP Control
C	GRY	720	Low Reference	C	GRY	720	Low Re
D	DK GRN	890	Fuel Tank Pressure Sensor Signal	D	DK GRN	890	Fuel Ta
E	GRY/BLK	598	5 Volt Reference	E	GRY	598	5 Volt I
F	BLK	150	Ground	F	BLK	150	Ground
G	GRY	120	Fuel Pump Supply Voltage	G	GRY	120	Fuel Pu
H	DK BLU	1936	Fuel Level Sensor Signal - Secondary	H	DK BLU	1936	Fuel Le Second
J	LT BLU	1937	Fuel Level Sensor Right Signal	J	LT BLU	1937	Fuel Le
K	-	-	Not Used	K	-	-	Not Us

C403 Transmission Harness To Terminal Identification LR Suspension Damper Jumper

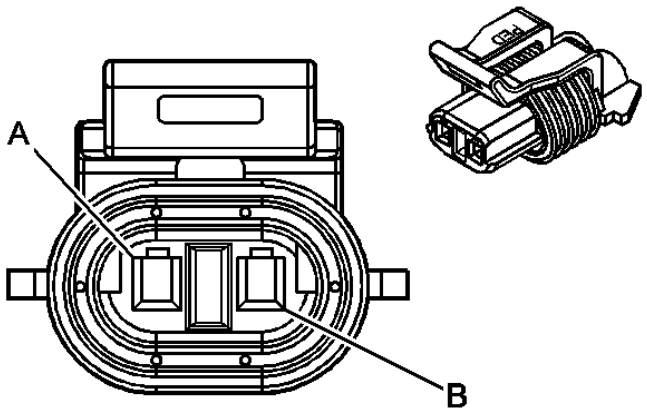

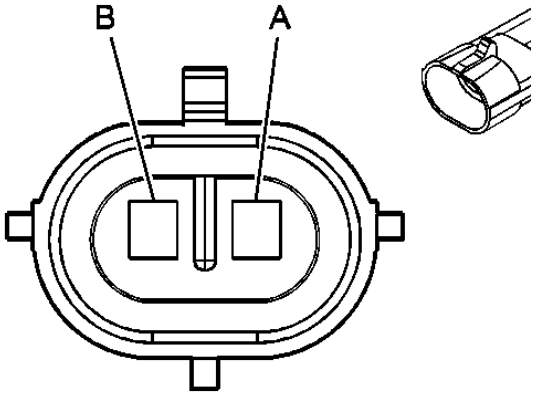

Connector Part Information		• 12052635 • 2-Way F Metri-Pack 150 Series (BLK)		Connector Part Information			
Pin	**Wire Color**	**Circuit No.**	**Function**	**Pin**	**Wire Color**	**Circuit No.**	
A	RED	901	Left Rear Suspension Damper Solenoid Control	A	DK BLU/WHT	1114	Left Rea Solenoid
B	BLK	902	Left Rear Suspension Damper Solenoid Low Reference	B	DK GRN	1115	Left Rea Solenoid

C406 Transmission Harness To Terminal Identification RR Suspension Damper Jumper

Terminal

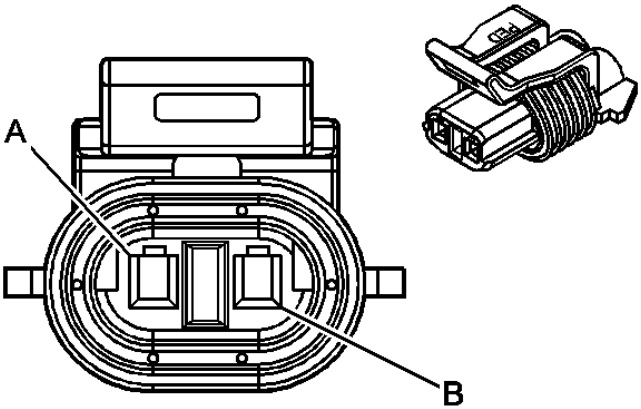

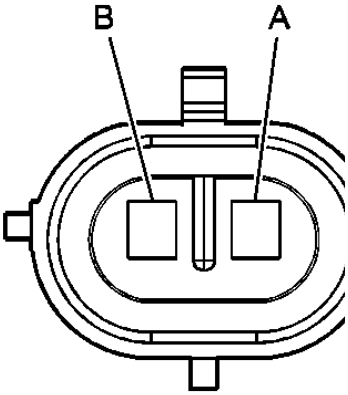

Identification

Connector		Connector	

Part Information		• 12052635 • 2-Way F Metri-Pack 150 Series (BLK)		Part Information		
Pin	**Wire Color**	**Circuit No.**	**Function**	**Pin**	**Wire Color**	**Circ No**
A	RED	901	Right Rear Suspension Damper Solenoid Control	A	DK BLU/WHT	111
B	BLK	902	Right Rear Suspension Damper Solenoid Low Reference	B	DK GRN	111

410 Front Body Harness Terminal Identification To Rear Window Defogger

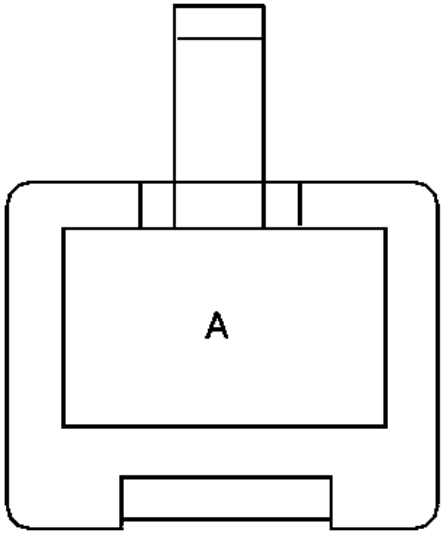

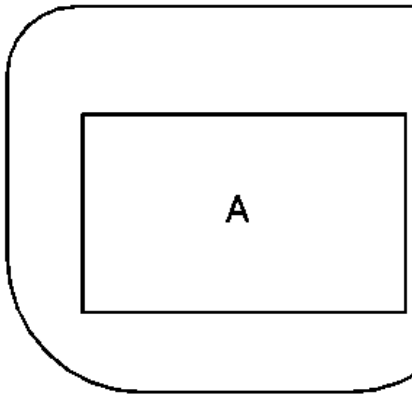

Connector Part Information		• 02977253 • 1-Way F 56 Series (BLK)		Connector Part Information			
Pin	**Wire Color**	**Circuit No.**	**Function**	**Pin**	**Wire Color**	**Circuit No.**	
A	BLK	293	Rear Defog Element Supply Voltage	A	BLK	293	Rear Def Voltage

C412 Fuel Tank Jumper Harness Terminal Identification To Left Fuel Tank Harness

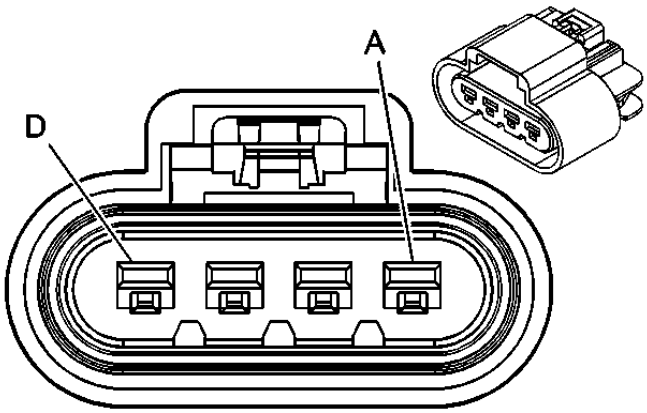

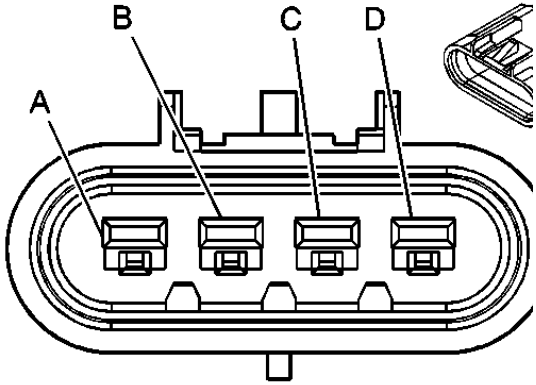

Connector Part Information		• 15326631 • 4-Way F GT 280 Series Sealed (BLK)		Connector Part Information			
Pin	**Wire Color**	**Circuit No.**	**Function**	**Pin**	**Wire Color**	**Circuit No.**	
A	GRY	120	Fuel Pump Supply Voltage	A	GRY	120	Fue
B	GRY	720	Low Reference	B	BLK	808	Lov
C	DK BLU	1936	Fuel Level Sensor Signal	C	DK BLU	1936	Fue
D	BLK	150	Ground	D	BLK	9531	Gro

C414 Fuel Tank Jumper Harness Terminal Identification To Right Fuel Tank Harness

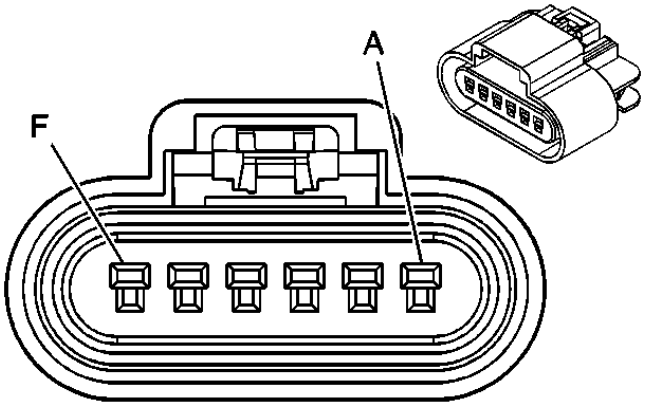

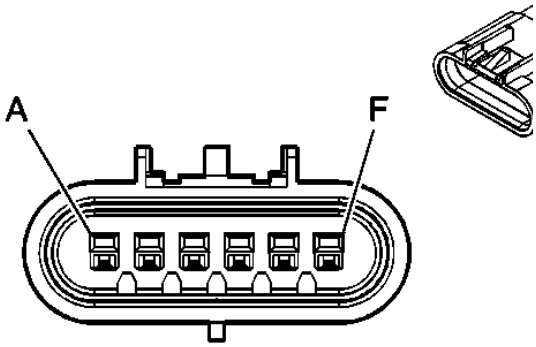

Connector	• 15326829	Connector	

Part Information		• 6-Way F GT 150 Series Sealed (BLK)		Part Information			
Pin	**Wire Color**	**Circuit No.**	**Function**	**Pin**	**Wire Color**	**Circuit No.**	
A	LT BLU	1937	Fuel Level Sensor Signal	A	LT BLU	1937	Fuel
B	GRY	720	Low Reference	B	BLK	808	Low
C	BLK	150	Ground	C	BLK/WHT	850	Grou
D	DK GRN	890	Fuel Tank Pressure Sensor Signal	D	DK GRN	890	Fuel Signa
E	GRY/BLK	598	5 Volt Reference	E	GRY	2709	5 Vol
F	-	-	Not Used	F	-	-	Not U

SPLICE PACK CONNECTOR END VIEWS

Splice Pack Terminal Identification SP100

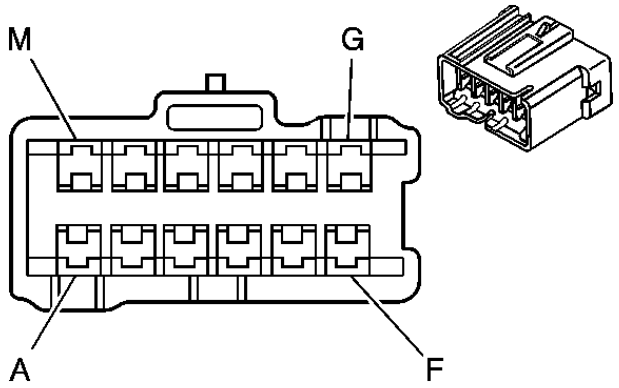

Connector Part Information		• 15305294 • 12-Way F Metri-Pack 280 Series Splice Saver DBL (BLK)	
Pin	**Wire Color**	**Circuit Number**	**Function**
A-G	BLK	150	Ground
H-J	-	-	Not Used
K-L	BLK	150	Ground
M	-	-	Not Used

Splice Pack Terminal Identification SP101

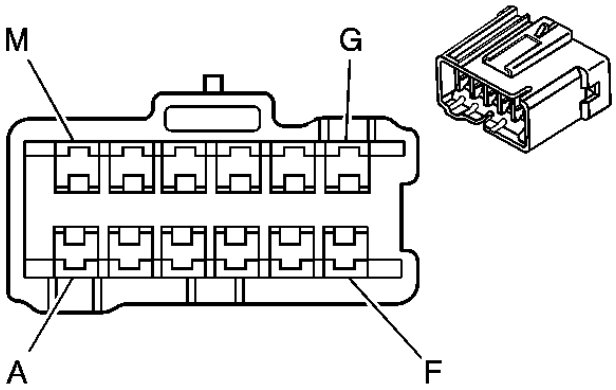

Connector Part Information		• **15305294** • **12-Way F Metri-Pack 280 Series Splice Saver DBL (BLK)**	
Pin	**Wire Color**	**Circuit Number**	**Function**
A-D	-	-	Not Used
E	BLK	150	Ground
F	-	-	Not Used
G-H	BLK	150	Ground
J	BLK	150	Ground (Export)
K	-	-	Not Used
L	BLK	150	Ground
M	-	-	Not Used

Splice Pack Terminal Identification SP102

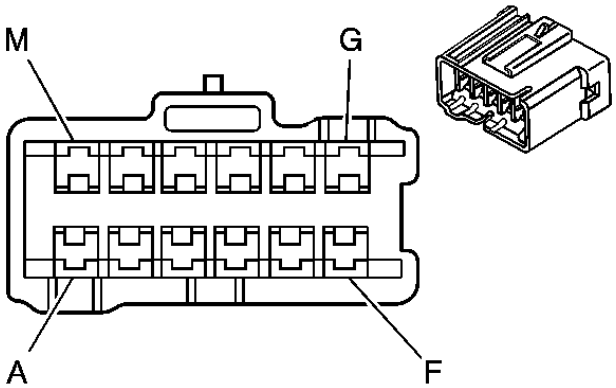

	• **15305291**

Connector Part Information		• 12-Way F Metri-Pack 280 Series Splice Saver DBL (BLK)	
Pin	**Wire Color**	**Circuit Number**	**Function**
A-G	BLK	150	Ground
H-M	-	-	Not Used

Splice Pack Terminal Identification SP201

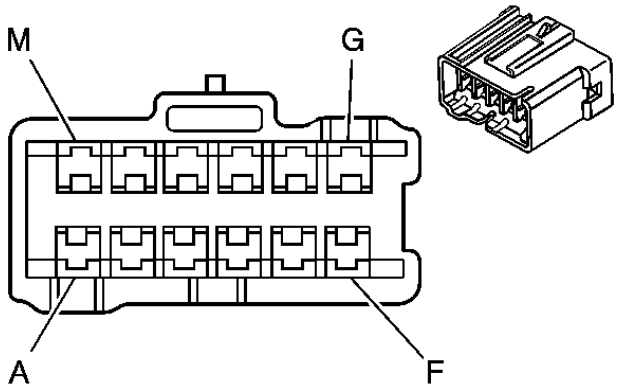

Connector Part Information		• 15305294 • 12-Way F Metri-Pack 280 Series Splice Saver DBL (BLK)	
Pin	**Wire Color**	**Circuit Number**	**Function**
A-G	BLK	150	Ground
H- J	BLK	150	Ground
	BLK	150	Ground
K	BLK	150	Ground
L	-	-	Not Used
M	BLK	150	Ground (W/ N37)

Splice Pack Terminal Identification SP202

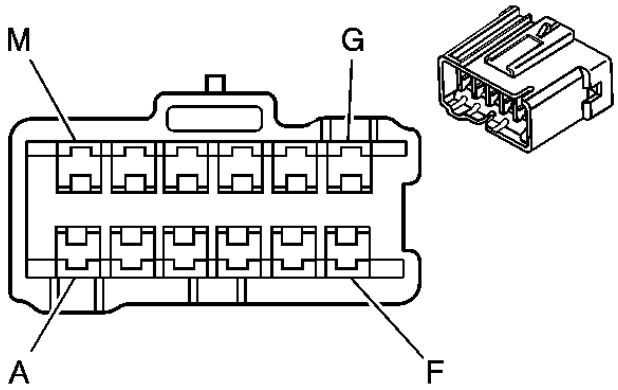

Connector Part Information		• **15305294** • **12-Way F Metri-Pack 280 Series Splice Saver DBL (BLK)**	
Pin	**Wire Color**	**Circuit Number**	**Function**
A-M	BLK	150	Ground

Splice Pack Terminal Identification SP203

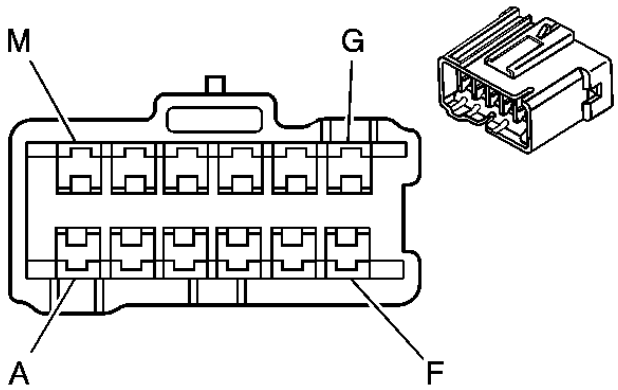

Connector Part Information		• **15305291** • **12-Way F Metri-Pack 280 Series Splice Saver DBL (BLK)**	
Pin	**Wire Color**	**Circuit Number**	**Function**
A-C	BLK/WHT	351	Ground
D	-	-	Not Used
E-G	BLK/WHT	351	Ground
H-L	-	-	Not Used
M	BLK/WHT	351	Ground

Splice Pack Terminal Identification SP208

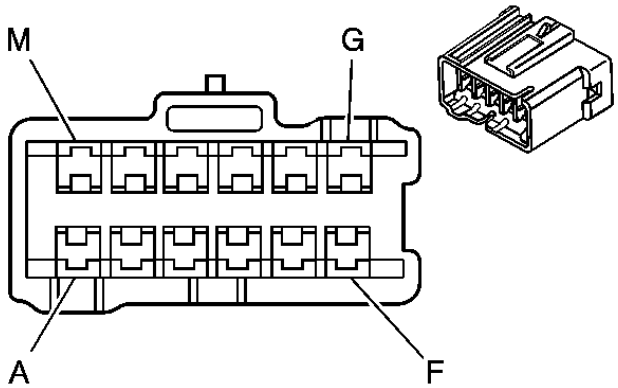

Connector Part Information		• 15305291 • 12-Way F Metri-Pack 280 Series Splice Saver DBL (BLK)	
Pin	**Wire Color**	**Circuit Number**	**Function**
A-C	BLK/WHT	851	Ground
D	-	-	Not Used
E-G	BLK/WHT	851	Ground
H-J	-	-	Not Used
K-L	BLK/WHT	851	Ground
M	-	-	Not Used

Splice Pack Terminal Identification SP302

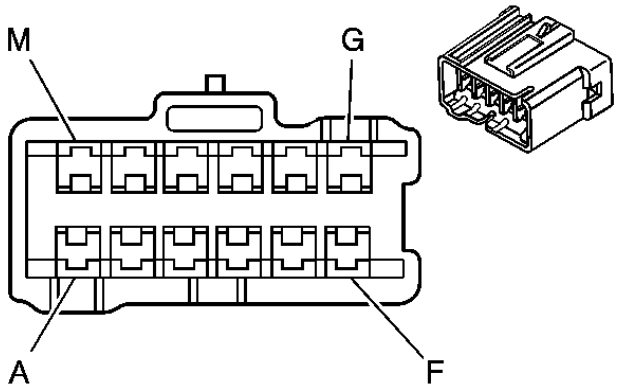

Connector Part Information		• 15305294 • 12-Way F Metri-Pack 280 Series Splice Saver DBL (BLK)	

Pin	Wire Color	Circuit Number	Function
A	BLK	150	Ground
B	-	-	Not Used
C	BLK	150	Ground
D-E	-	-	Not Used
F-G	BLK	150	Ground
H	-	-	Not Used
J-M	BLK	150	Ground

Splice Pack Terminal Identification SP400

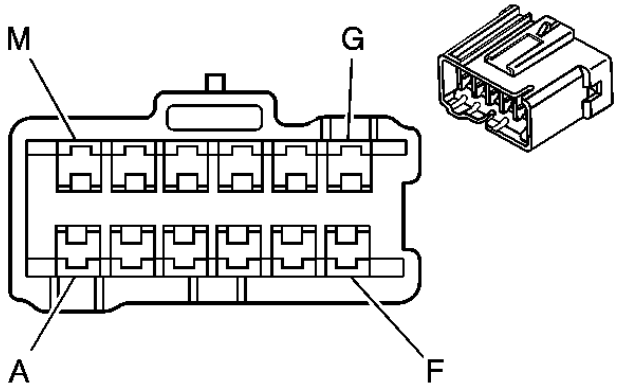

Connector Part Information		• 15305291 • 12-Way F Metri-Pack 280 Series Splice Saver DBL (BLK)	
Pin	**Wire Color**	**Circuit Number**	**Function**
A-M	BLK	150	Ground

Splice Pack Terminal Identification SP402 (Export)

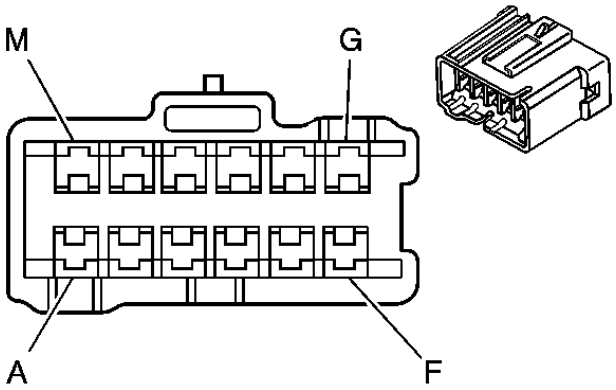

Connector Part Information		• 15305291 • 12-Way F Metri-Pack 280 Series Splice Saver DBL (BLK)	
Pin	**Wire Color**	**Circuit Number**	**Function**
A-L	BLK	150	Ground
M	-	-	Ground - Not Used

REPAIR INSTRUCTIONS

RELAY REPLACEMENT (WITHIN AN ELECTRICAL CENTER)

Tools Required

J 43244 Relay Puller Pliers. See **Special Tools and Equipment** .

Removal Procedure

1. Remove the electrical center cover.
2. Locate the relay. Refer to **Electrical Center Identification Views** to locate the electrical center where the relay exists.

IMPORTANT:

- **Always note the orientation of the relay.**
- **Ensure that the electrical center is secure, as not to put added stress on the wires or terminals.**

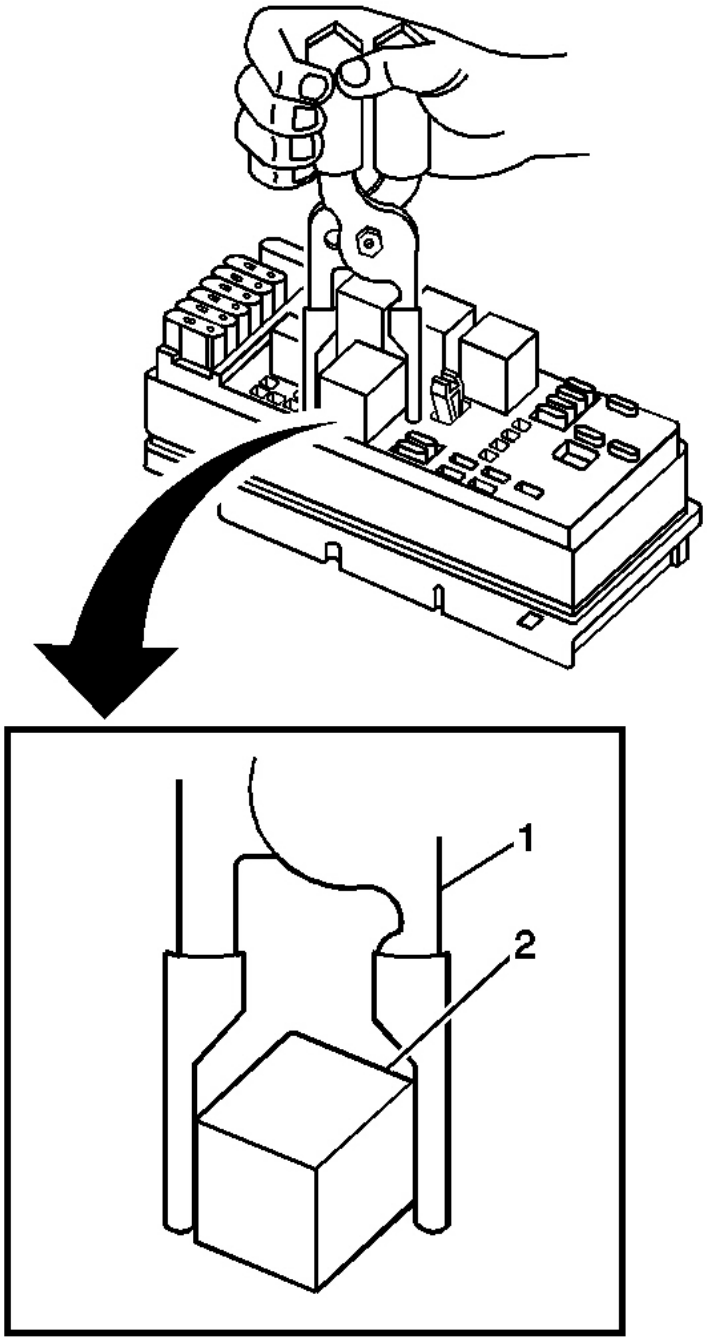

Fig. 99: Removing Or Installing Relay In Electrical Center Component View
Courtesy of GENERAL MOTORS CORP.

3. Using the **J 43244** (1) position the tool on opposing corners of the relay (2). See **Special Tools and**

Equipment .

NOTE: **Use J43244 to pull the relay straight out from the electrical center terminals. The use of pliers or a flat bladed tool could damage the electrical center.**

4. Remove the relay (2) from the electrical center.

Installation Procedure

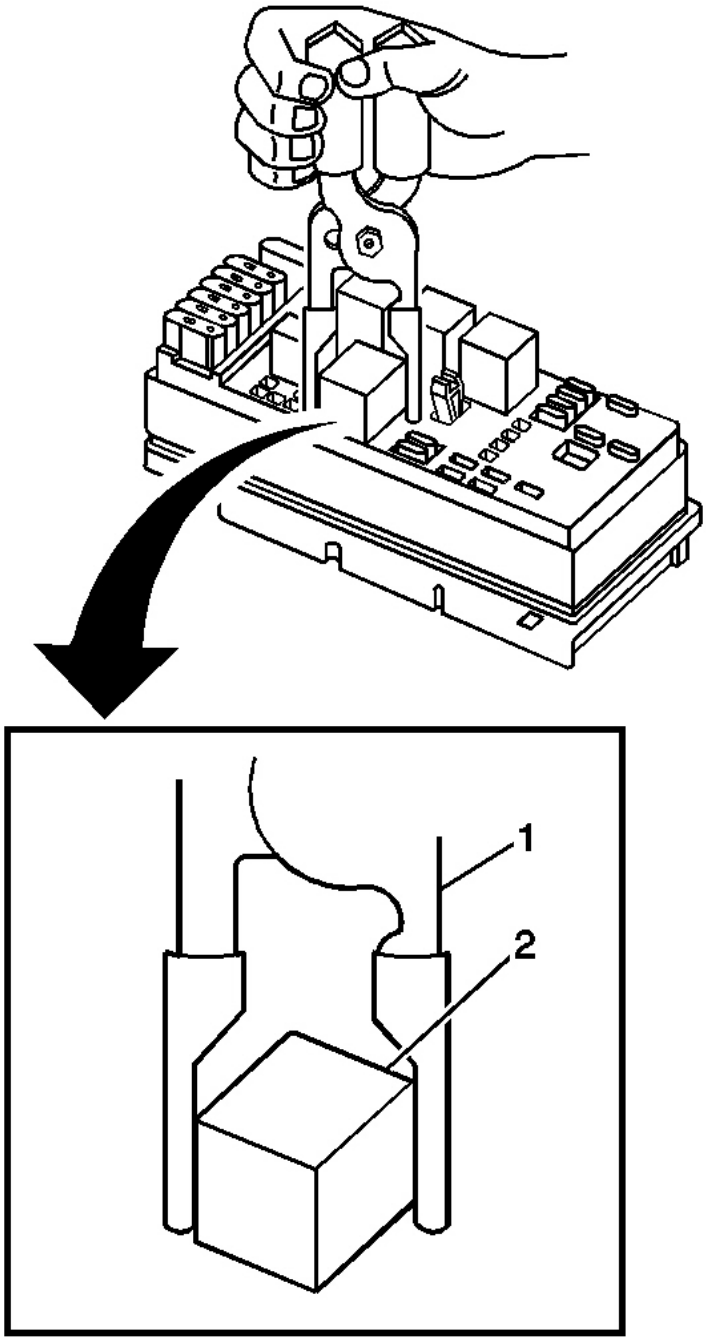

Fig. 100: Removing Or Installing Relay In Electrical Center Component View
Courtesy of GENERAL MOTORS CORP.

1. Install the relay (2) in the same position as removed.

2. Install the electrical center cover.

RELAY REPLACEMENT (ATTACHED TO WIRE HARNESS)

Removal Procedure

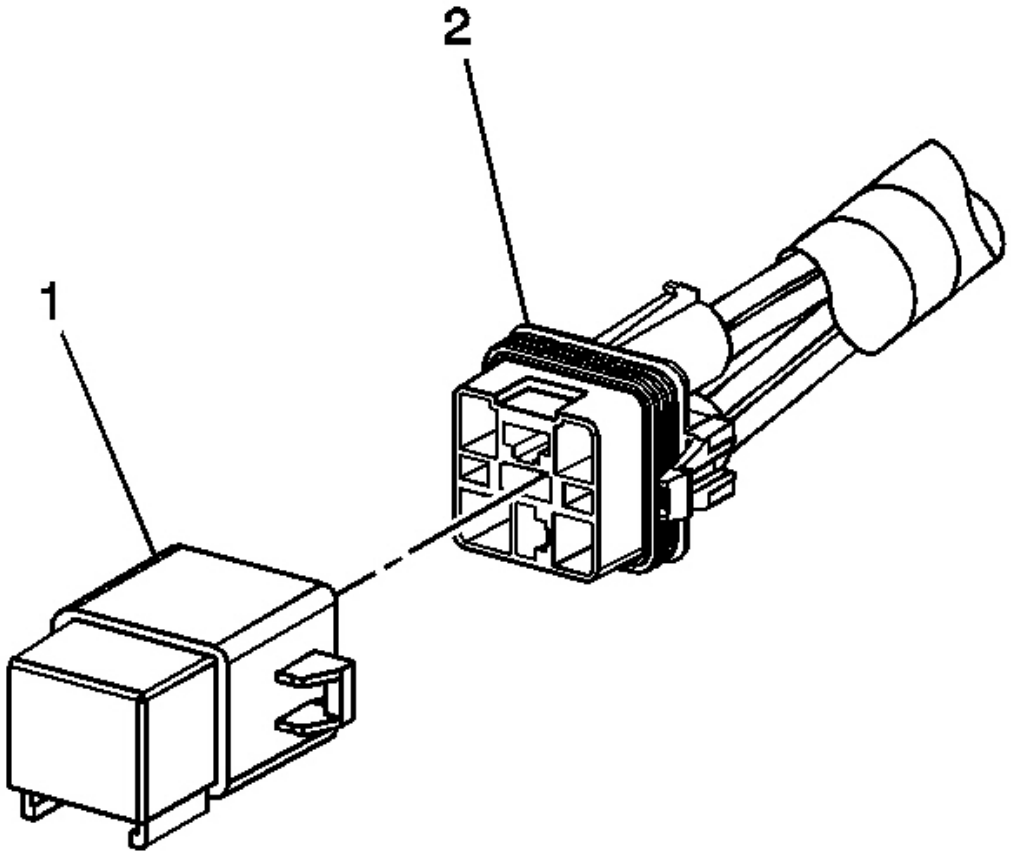

Fig. 101: Identifying Relay & Wire Harness Connector Terminal Identification
Courtesy of GENERAL MOTORS CORP.

1. Locate the relay. Refer to the **Master Electrical Component List** to locate the relay in the vehicle.
2. Remove any fasteners which hold the relay in place.
3. Remove any connector position assurance (CPA) devices or secondary locks.

IMPORTANT: Use care when removing a relay in a wiring harness when the relay is secured by fasteners or tape.

4. Separate the relay (1) from the wire harness connector (2).

Installation Procedure

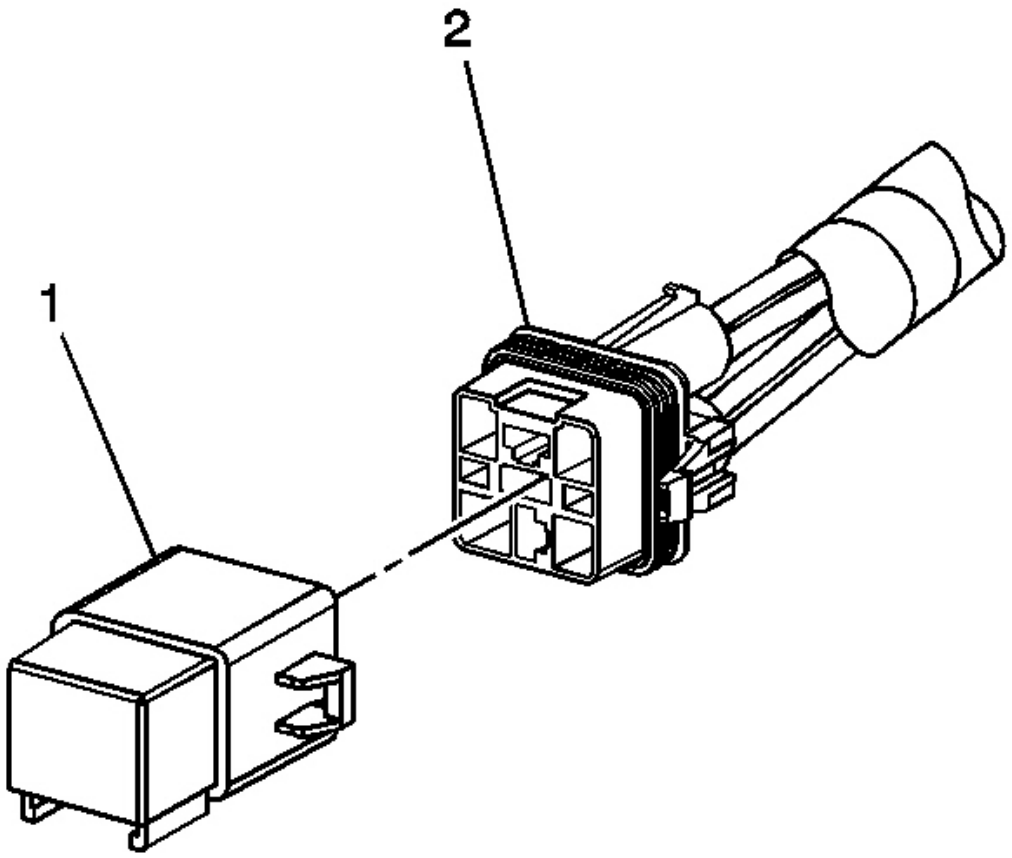

Fig. 102: Identifying Relay & Wire Harness Connector Terminal Identification
Courtesy of GENERAL MOTORS CORP.

1. Connect the relay (1) to the wire harness connector (2).
2. Install any connector position assurance (CPA) devices or secondary locks.
3. Install the relay using any fasteners or tape that originally held the relay in place.

UNDERHOOD ELECTRICAL CENTER OR JUNCTION BLOCK REPLACEMENT

Removal Procedure

1. Disconnect the negative battery cable. Refer to **Battery Negative Cable Disconnect/Connect Procedure** in Engine Electrical.

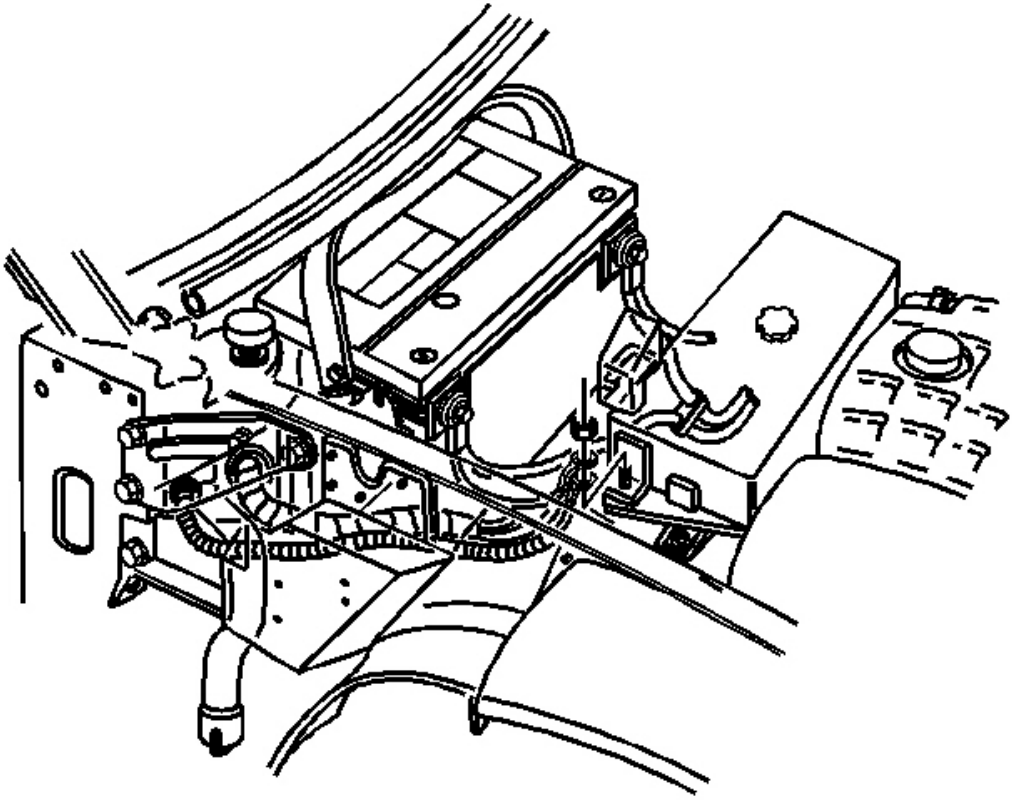

Fig. 103: Cable Lead To Junction Block
Courtesy of GENERAL MOTORS CORP.

2. Remove the positive battery cable lead nut from the junction block. Reposition the cable lead away from the junction block.
3. Remove the junction block cover.

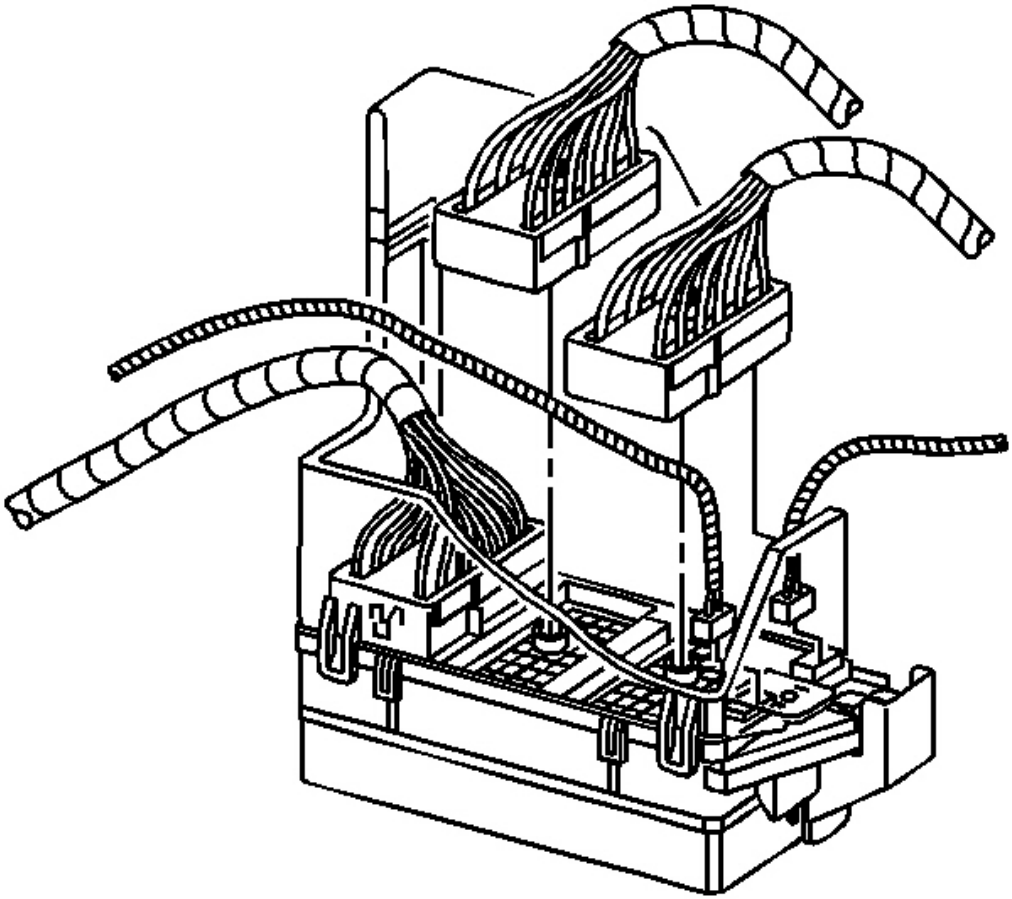

Fig. 104: IP Wiring Harness Connector To Junction Block
Courtesy of GENERAL MOTORS CORP.

4. Disengage the electrical cable retainers at the rear of the junction block.
5. Turn the junction block upside down and open the lower cover.
6. Loosen the bolts retaining the engine, IP, and forward lamp wiring harness connectors to the junction block.
7. Disconnect the engine wiring harness connector from the junction block.
8. Disconnect the IP wiring harness connector from the junction block.
9. Remove the junction block.

Installation Procedure

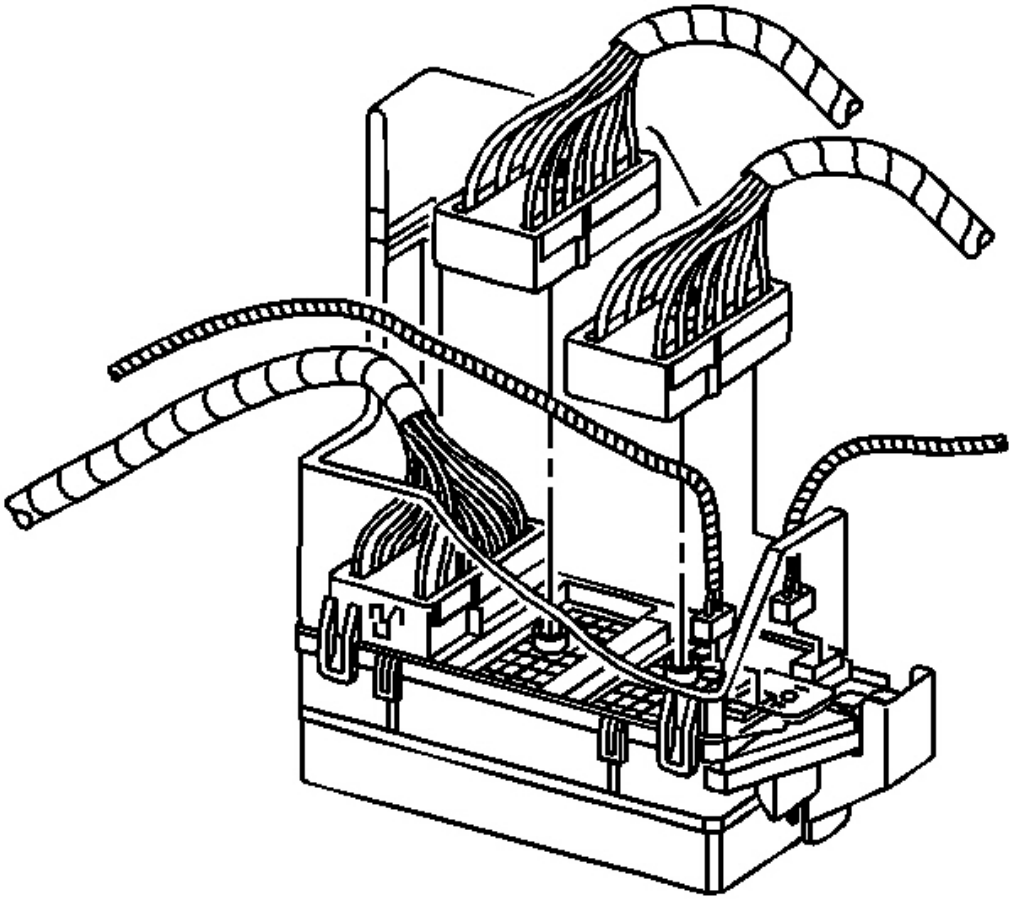

Fig. 105: IP Wiring Harness Connector To Junction Block
Courtesy of GENERAL MOTORS CORP.

1. Connect the IP wiring harness connector to the junction block.
2. Connect the engine wiring harness connector to the junction block.

NOTE: Refer to Fastener Notice in Cautions and Notices.

3. Install the underhood junction block connector bolts.

   Tighten: Tighten the underhood junction block connector bolts to 7 N.m (62 lb in).

4. Turn the electrical center right side up.
5. Connect the electrical cable retainers at the rear of the junction block.

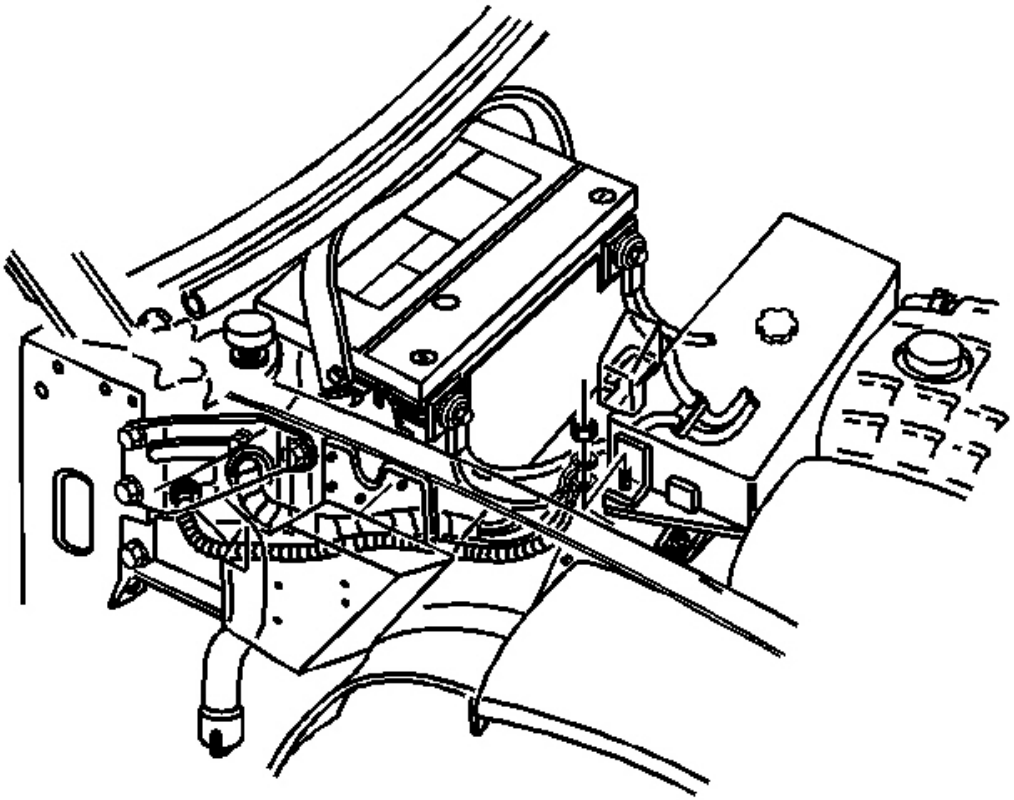

Fig. 106: Cable Lead To Junction Block
Courtesy of GENERAL MOTORS CORP.

6. Install the junction block cover.
7. Install the positive battery cable lead to the junction block stud. Install the positive battery cable lead nut.

   Tighten: Tighten the positive battery cable lead nut to 10 N.m (89 lb in).

8. Connect the negative battery cable. Refer to **Battery Negative Cable Disconnect/Connect Procedure** in Engine Electrical.

INSTRUMENT PANEL ELECTRICAL CENTER OR JUNCTION BLOCK REPLACEMENT

Removal Procedure

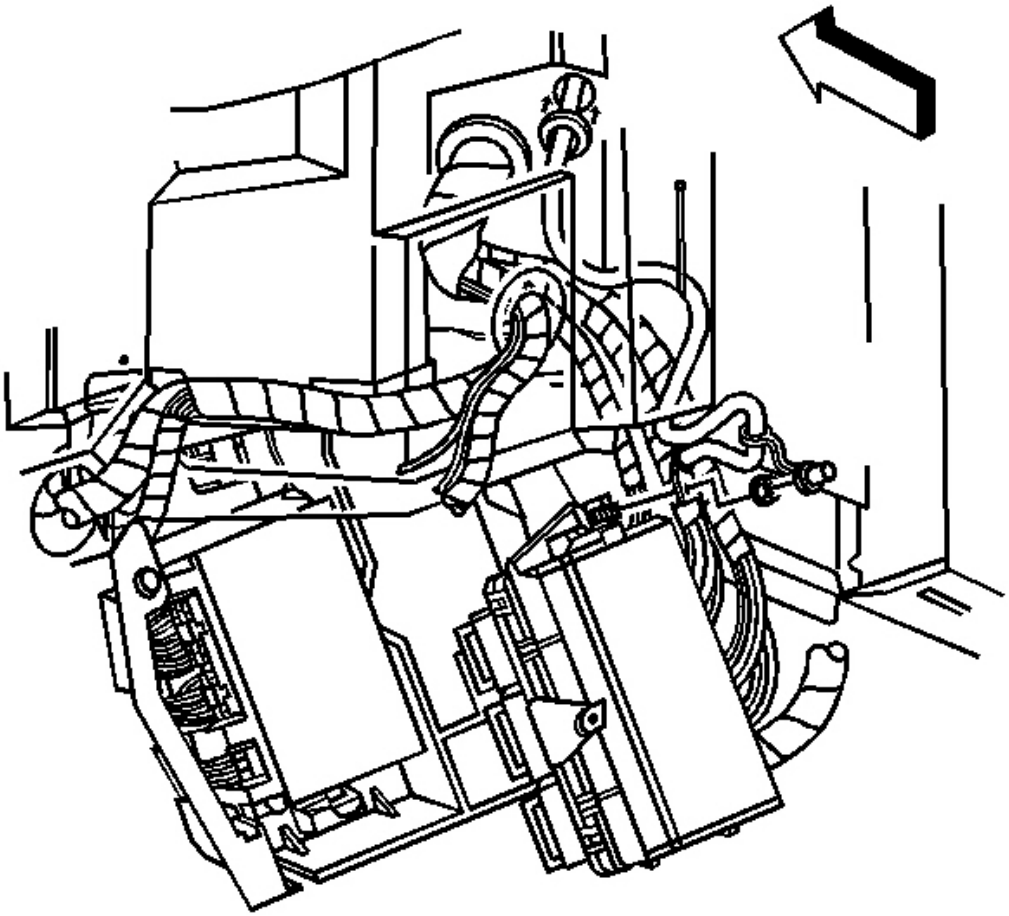

Fig. 107: Bracket To Electrical Wiring Junction Block
Courtesy of GENERAL MOTORS CORP.

1. Disconnect the negative battery cable. Refer to **Battery Negative Cable Disconnect/Connect Procedure** in Engine Electrical.
2. Remove the right door sill plate. Refer to **Door Sill Plate Replacement** in Interior Trim.
3. Remove the floor kick-up pad on the passenger side. Refer to **Kick-Up Panel Replacement - Front Floor** in Interior Trim.
4. Remove the retaining bolt which secures the multi-use bracket to the electrical wiring junction block.

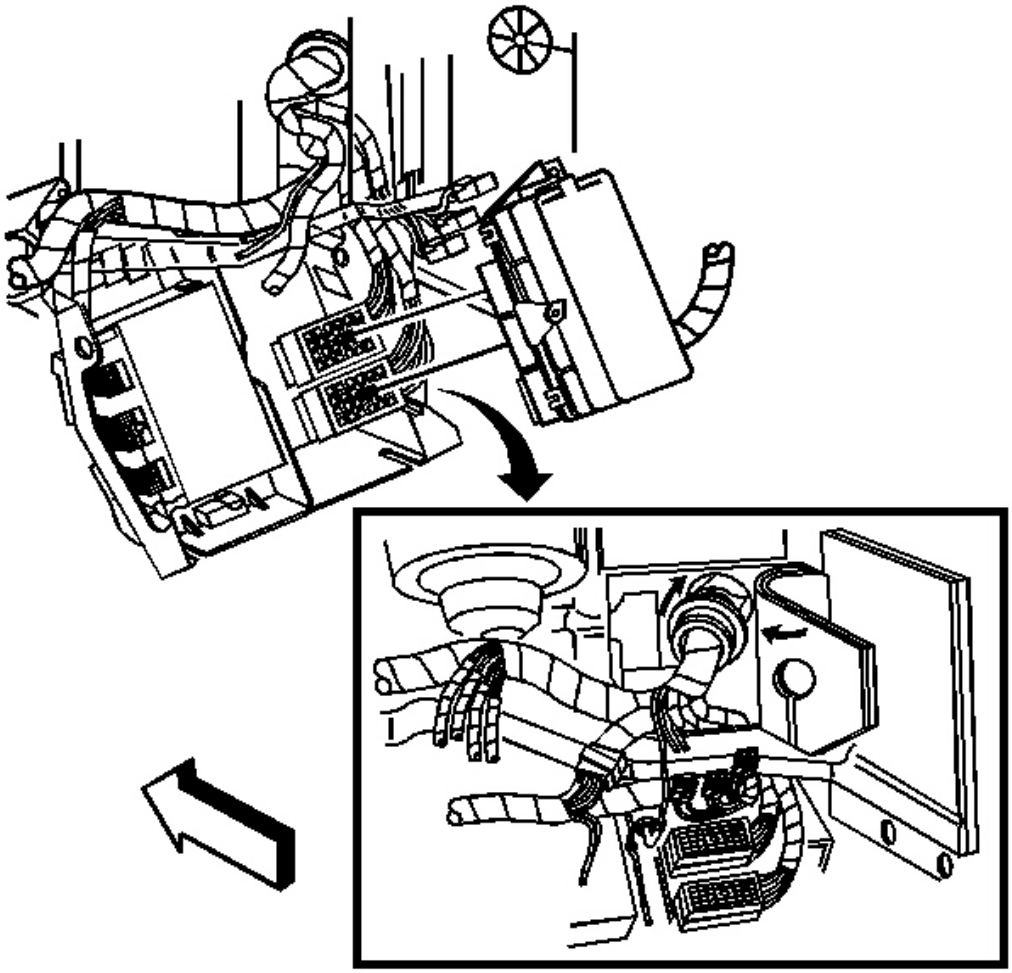

Fig. 108: 64-Way Block Connectors & 3 I/P Wiring Harness Connectors
Courtesy of GENERAL MOTORS CORP.

5. Disengage the retaining clip from the outboard side, twist the electrical wiring block, and pull outward.
6. Remove the battery cable lead.
7. Disconnect 3 64-way block connectors and 3 I/P wiring harness connectors.
8. Transfer all fuses and relays as required.

Installation Procedure

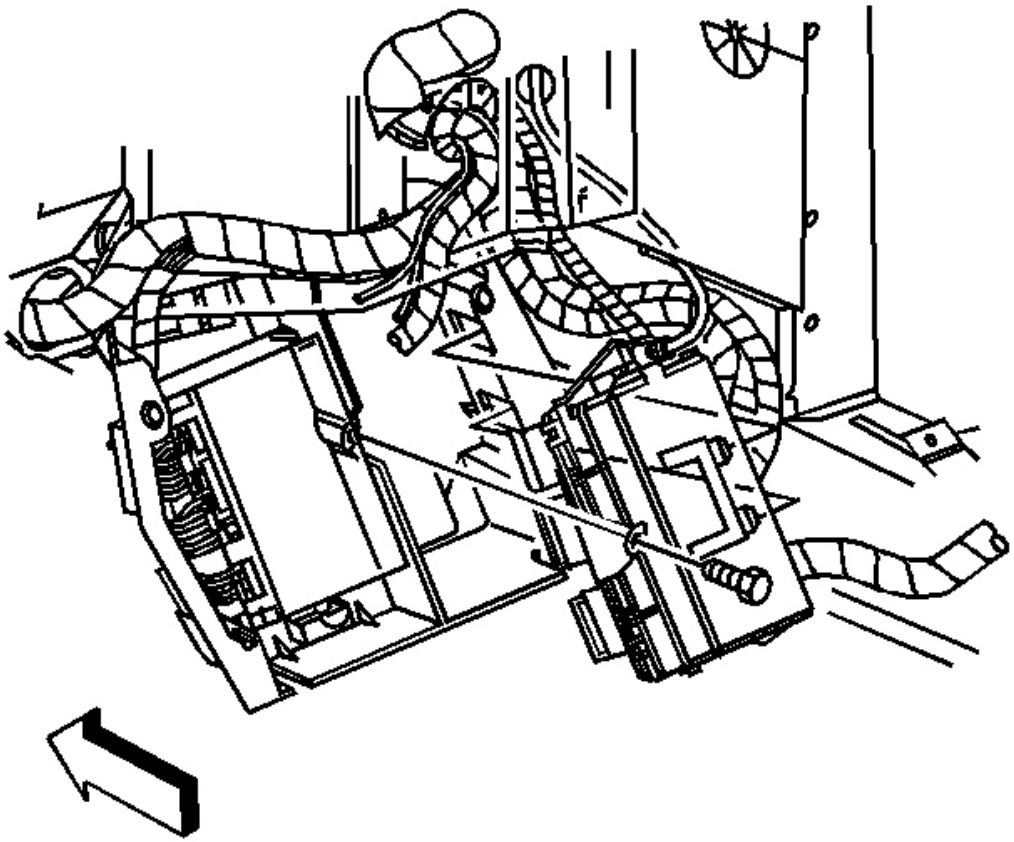

Fig. 109: Electrical Wiring Junction Block, I/P Wiring Harness Connectors & 3 64-Way Block Connectors
Courtesy of GENERAL MOTORS CORP.

1. Position the electrical wiring junction block and connect 3 I/P wiring harness connectors and 3 64-way block connectors.
2. Install the electrical wiring junction block to the multi-use bracket with the retaining bolt.
3. Install the battery cable lead.
4. Install the floor kick-up pad on the passenger side. Refer to **Kick-Up Panel Replacement - Front Floor** in Interior Trim.
5. Install the right door sill plate. Refer to **Door Sill Plate Replacement** in Interior Trim.
6. Connect the negative battery cable. Refer to **Battery Negative Cable Disconnect/Connect Procedure** in Engine Electrical.

SPECIAL TOOLS AND EQUIPMENT

SPECIAL TOOLS

Special Tools

Illustration	Tool Number/ Description
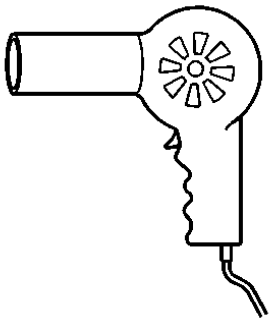	J 25070 Heat Gun 500-700 F
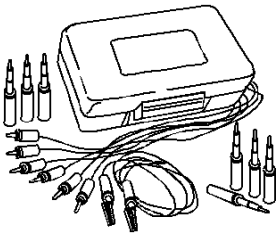	J 35616 GM Terminal Test Kit
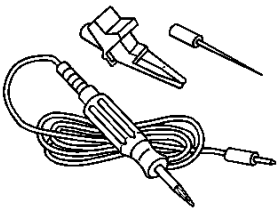	J 35616-200 Test Light - Probe Kit
	J 36169-A Fused Jumper Wire

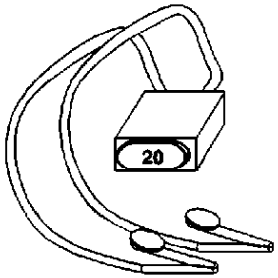	
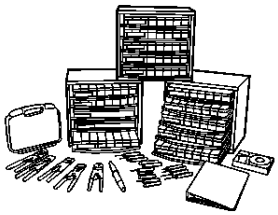	J 38125 Terminal Repair Kit
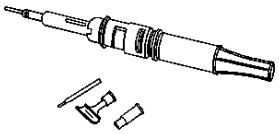	J 38125-5 Ultra Torch
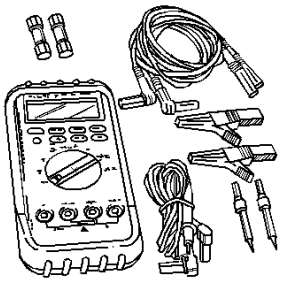	J 39200 Digital Multimeter
	J 42675

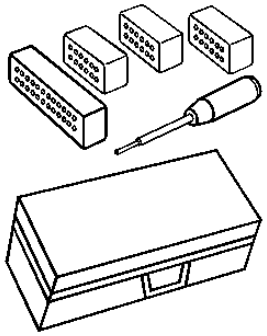	Flat-Wire Probe Adapter
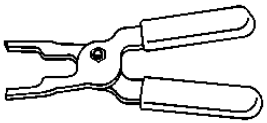	J 43244 Relay Puller Pliers

AIR CONDITIONING

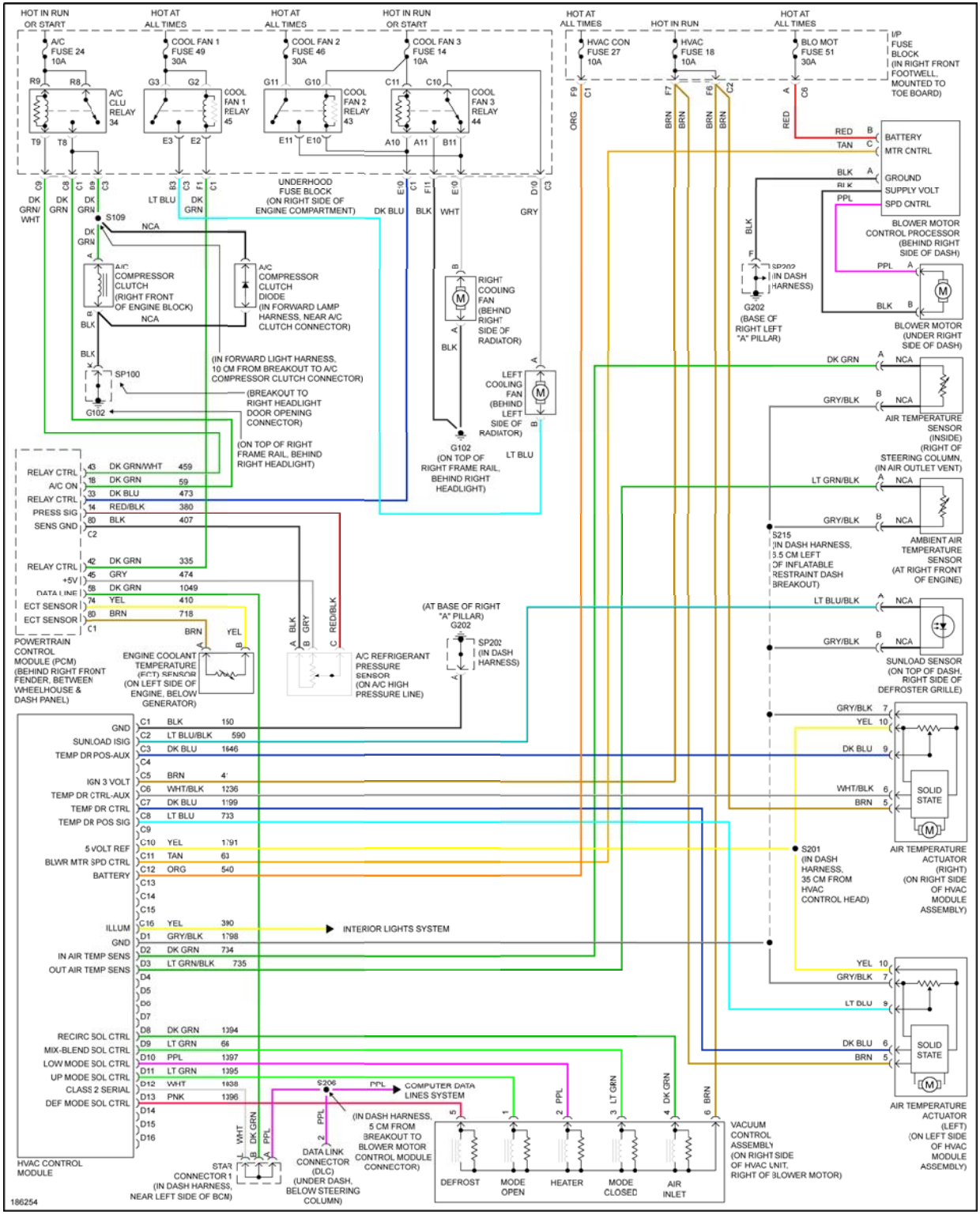
HOT IN RUN OR START
HOT AT ALL TIMES
HOT AT ALL TIMES
HOT IN RUN OR START
HOT AT ALL TIMES
HOT IN RUN
HOT AT ALL TIMES
A/C FUSE 24 10A
COOL FAN 1 FUSE 49 30A
COOL FAN 2 FUSE 46 30A
COOL FAN 3 FUSE 14 10A
HVAC CON FUSE 27 10A
HVAC FUSE 18 10A
BLO MOT FUSE 51 30A
I/P FUSE BLOCK (IN RIGHT FRONT FOOTWELL, MOUNTED TO TOE BOARD)
A/C CLU RELAY 34
COOL FAN 1 RELAY 45
COOL FAN 2 RELAY 43
COOL FAN 3 RELAY 44
UNDERHOOD FUSE BLOCK (ON RIGHT SIDE OF ENGINE COMPARTMENT)
BATTERY
MTR CNTRL
GROUND
SUPPLY VOLT
SPD CNTRL
BLOWER MOTOR CONTROL PROCESSOR (BEHIND RIGHT SIDE OF DASH)
BLOWER MOTOR (UNDER RIGHT SIDE OF DASH)
SP202 (IN DASH HARNESS)
G202 (BASE OF RIGHT LEFT "A" PILLAR)
S109
A/C COMPRESSOR CLUTCH (RIGHT FRONT OF ENGINE BLOCK)
A/C COMPRESSOR CLUTCH DIODE (IN FORWARD LAMP HARNESS, NEAR A/C CLUTCH CONNECTOR)
(IN FORWARD LIGHT HARNESS, 10 CM FROM BREAKOUT TO A/C COMPRESSOR CLUTCH CONNECTOR)
SP100
(BREAKOUT TO RIGHT HEADLIGHT DOOR OPENING CONNECTOR)
G102
(ON TOP OF RIGHT FRAME RAIL, BEHIND RIGHT HEADLIGHT)
RIGHT COOLING FAN (BEHIND RIGHT SIDE OF RADIATOR)
LEFT COOLING FAN (BEHIND LEFT SIDE OF RADIATOR)
G102 (ON TOP OF RIGHT FRAME RAIL, BEHIND RIGHT HEADLIGHT)
AIR TEMPERATURE SENSOR (INSIDE) (RIGHT OF STEERING COLUMN, (IN AIR OUTLET VENT)
AMBIENT AIR TEMPERATURE SENSOR (AT RIGHT FRONT OF ENGINE)
S215 (IN DASH HARNESS, 5.5 CM LEFT OF INFLATABLE RESTRAINT DASH BREAKOUT)
SUNLOAD SENSOR (ON TOP OF DASH, RIGHT SIDE OF DEFROSTER GRILLE)
RELAY CTRL
A/C ON
RELAY CTRL
PRESS SIG
SENS GND
RELAY CTRL
+5V
DATA LINE
ECT SENSOR
ECT SENSOR
POWERTRAIN CONTROL MODULE (PCM) (BEHIND RIGHT FRONT FENDER, BETWEEN WHEELHOUSE & DASH PANEL)
ENGINE COOLANT TEMPERATURE (ECT) SENSOR (ON LEFT SIDE OF ENGINE, BELOW GENERATOR)
A/C REFRIGERANT PRESSURE SENSOR (ON A/C HIGH PRESSURE LINE)
(AT BASE OF RIGHT "A" PILLAR) G202
SP202 (IN DASH HARNESS)
GND
SUNLOAD ISIG
TEMP DR POS-AUX
IGN 3 VOLT
TEMP DR CTRL-AUX
TEMP DR CTRL
TEMP DR POS SIG
5 VOLT REF
BLWR MTR SPD CTRL
BATTERY
ILLUM
GND
IN AIR TEMP SENS
OUT AIR TEMP SENS
INTERIOR LIGHTS SYSTEM
RECIRC SOL CTRL
MIX-BLEND SOL CTRL
LOW MODE SOL CTRL
UP MODE SOL CTRL
CLASS 2 SERIAL
DEF MODE SOL CTRL
HVAC CONTROL MODULE
S201 (IN DASH HARNESS, 35 CM FROM HVAC CONTROL HEAD)
SOLID STATE
AIR TEMPERATURE ACTUATOR (RIGHT) (ON RIGHT SIDE OF HVAC MODULE ASSEMBLY)
AIR TEMPERATURE ACTUATOR (LEFT) (ON LEFT SIDE OF HVAC MODULE ASSEMBLY)
S206
COMPUTER DATA LINES SYSTEM
(IN DASH HARNESS, 5 CM FROM BREAKOUT TO BLOWER MOTOR CONTROL MODULE CONNECTOR)
DATA LINK CONNECTOR (DLC) (UNDER DASH, BELOW STEERING COLUMN)
STAR CONNECTOR 1 (IN DASH HARNESS, NEAR LEFT SIDE OF BCM)
VACUUM CONTROL ASSEMBLY (ON RIGHT SIDE OF HVAC UNIT, RIGHT OF BLOWER MOTOR)
DEFROST
MODE OPEN
HEATER
MODE CLOSED
AIR INLET
186254

Fig. 1: Automatic A/C Circuit

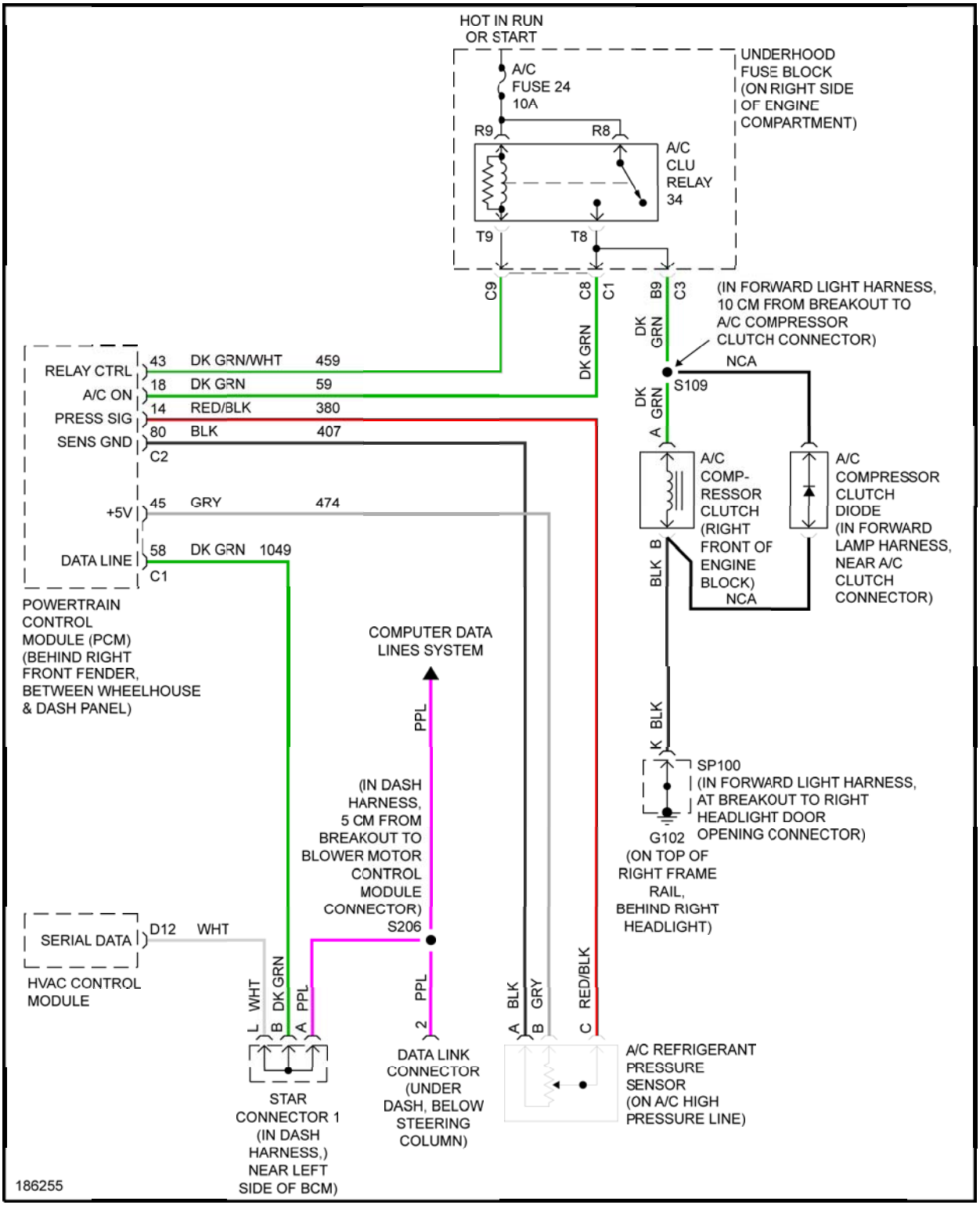
HOT IN RUN
OR START
A/C
FUSE 24
10A
UNDERHOOD
FUSE BLOCK
(ON RIGHT SIDE
OF ENGINE
COMPARTMENT)
R9
R8
A/C
CLU
RELAY
34
T9
T8
C9
C8
C1
B9
C3
DK GRN
(IN FORWARD LIGHT HARNESS,
10 CM FROM BREAKOUT TO
A/C COMPRESSOR
CLUTCH CONNECTOR)
NCA
S109
DK GRN
A
RELAY CTRL
43
DK GRN/WHT
459
A/C ON
18
DK GRN
59
PRESS SIG
14
RED/BLK
380
SENS GND
80
BLK
407
C2
+5V
45
GRY
474
DATA LINE
58
DK GRN
1049
C1
POWERTRAIN
CONTROL
MODULE (PCM)
(BEHIND RIGHT
FRONT FENDER,
BETWEEN WHEELHOUSE
& DASH PANEL)
A/C
COMP-
RESSOR
CLUTCH
(RIGHT
FRONT OF
ENGINE
BLOCK)
NCA
A/C
COMPRESSOR
CLUTCH
DIODE
(IN FORWARD
LAMP HARNESS,
NEAR A/C
CLUTCH
CONNECTOR)
B
BLK
COMPUTER DATA
LINES SYSTEM
PPL
K
BLK
SP100
(IN FORWARD LIGHT HARNESS,
AT BREAKOUT TO RIGHT
HEADLIGHT DOOR
OPENING CONNECTOR)
G102
(ON TOP OF
RIGHT FRAME
RAIL,
BEHIND RIGHT
HEADLIGHT)
(IN DASH
HARNESS,
5 CM FROM
BREAKOUT TO
BLOWER MOTOR
CONTROL
MODULE
CONNECTOR)
S206
SERIAL DATA
D12
WHT
HVAC CONTROL
MODULE
L
WHT
B
DK GRN
A
PPL
2
PPL
A
BLK
B
GRY
C
RED/BLK
STAR
CONNECTOR 1
(IN DASH
HARNESS,)
NEAR LEFT
SIDE OF BCM)
DATA LINK
CONNECTOR
(UNDER
DASH, BELOW
STEERING
COLUMN)
A/C REFRIGERANT
PRESSURE
SENSOR
(ON A/C HIGH
PRESSURE LINE)
186255

Fig. 2: Compressor Circuit

ANTI-LOCK BRAKES

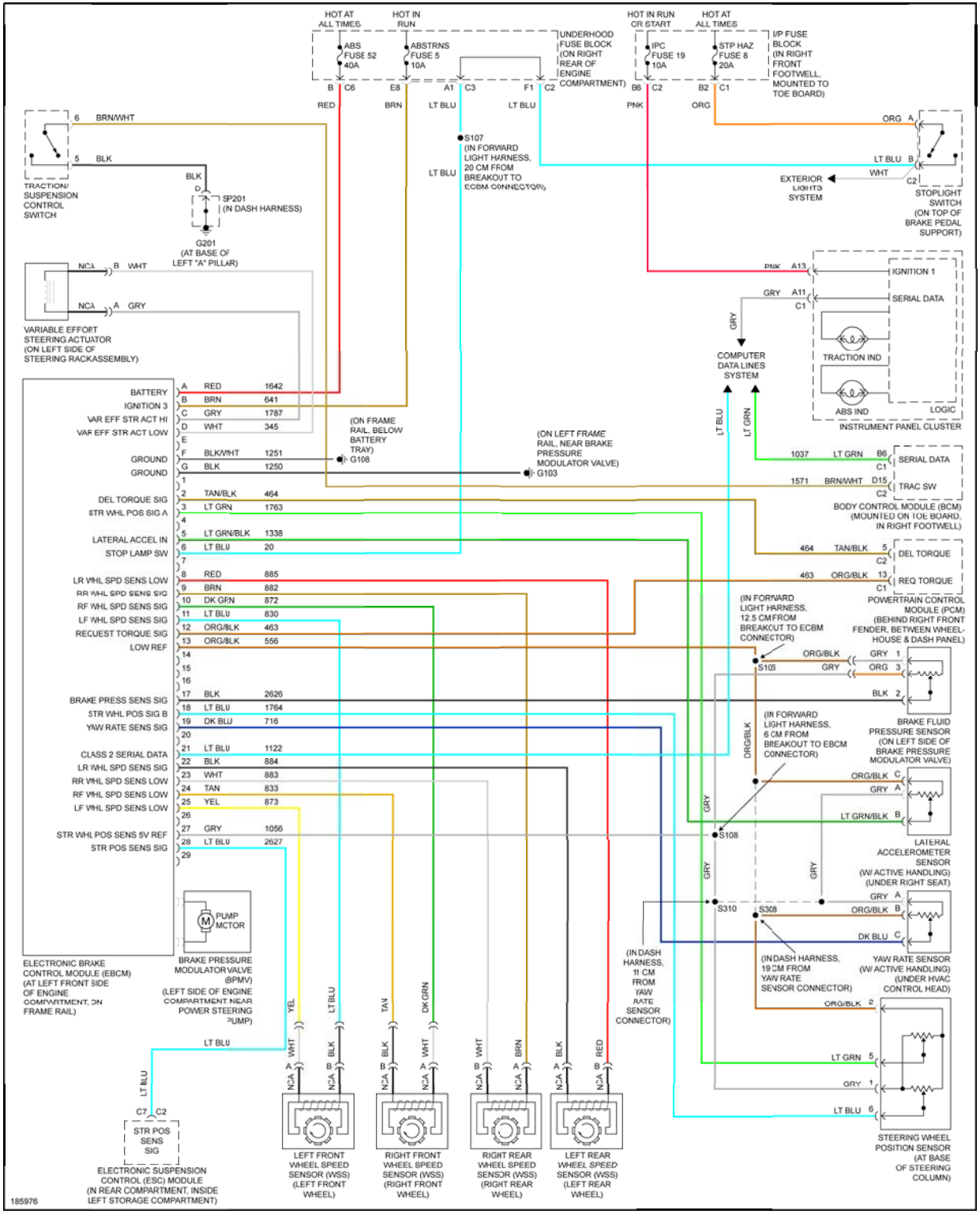
HOT AT ALL TIMES
HOT IN RUN
ABS FUSE 52 40A
ABSTRNS FUSE 5 10A
UNDERHOOD FUSE BLOCK (ON RIGHT REAR OF ENGINE COMPARTMENT)
HOT IN RUN OR START
HOT AT ALL TIMES
IPC FUSE 19 10A
STP HAZ FUSE 8 20A
I/P FUSE BLOCK (IN RIGHT FRONT FOOTWELL, MOUNTED TO TOE BOARD)
B C6 E8 A1 C3 F1 C2 B6 C2 B2 C1
RED BRN LT BLU LT BLU PNK ORG
6 BRN/WHT
5 BLK
TRACTION/ SUSPENSION CONTROL SWITCH
BLK
SP201 (IN DASH HARNESS)
G201 (AT BASE OF LEFT "A" PILLAR)
S107 (IN FORWARD LIGHT HARNESS, 20 CM FROM BREAKOUT TO ECBM CONNECTOR)
LT BLU
ORG A
LT BLU B
WHT
C2
EXTERIOR LIGHTS SYSTEM
STOPLIGHT SWITCH (ON TOP OF BRAKE PEDAL SUPPORT)
NCA B WHT
NCA A GRY
VARIABLE EFFORT STEERING ACTUATOR (ON LEFT SIDE OF STEERING RACKASSEMBLY)
PNK A13
IGNITION 1
GRY A11 C1
SERIAL DATA
GRY
COMPUTER DATA LINES SYSTEM
TRACTION IND
ABS IND
LOGIC
INSTRUMENT PANEL CLUSTER
BATTERY A RED 1642
IGNITION 3 B BRN 641
VAR EFF STR ACT HI C GRY 1787
VAR EFF STR ACT LOW D WHT 345
E
GROUND F BLK/WHT 1251
GROUND G BLK 1250
1
DEL TORQUE SIG 2 TAN/BLK 464
STR WHL POS SIG A 3 LT GRN 1763
4
LATERAL ACCEL IN 5 LT GRN/BLK 1338
STOP LAMP SW 6 LT BLU 20
7
LR WHL SPD SENS LOW 8 RED 885
RR WHL SPD SENS SIG 9 BRN 882
RF WHL SPD SENS SIG 10 DK GRN 872
LF WHL SPD SENS SIG 11 LT BLU 830
REQUEST TORQUE SIG 12 ORG/BLK 463
LOW REF 13 ORG/BLK 556
14
15
16
BRAKE PRESS SENS SIG 17 BLK 2626
STR WHL POS SIG B 18 LT BLU 1764
YAW RATE SENS SIG 19 DK BLU 716
20
CLASS 2 SERIAL DATA 21 LT BLU 1122
LR WHL SPD SENS SIG 22 BLK 884
RR WHL SPD SENS LOW 23 WHT 883
RF WHL SPD SENS LOW 24 TAN 833
LF WHL SPD SENS LOW 25 YEL 873
26
STR WHL POS SENS 5V REF 27 GRY 1056
STR POS SENS SIG 28 LT BLU 2627
29
ELECTRONIC BRAKE CONTROL MODULE (EBCM) (AT LEFT FRONT SIDE OF ENGINE COMPARTMENT, ON FRAME RAIL)
PUMP MOTOR
BRAKE PRESSURE MODULATOR VALVE (BPMV) (LEFT SIDE OF ENGINE COMPARTMENT, NEAR POWER STEERING PUMP)
(ON FRAME RAIL, BELOW BATTERY TRAY) G108
(ON LEFT FRAME RAIL, NEAR BRAKE PRESSURE MODULATOR VALVE) G103
LT BLU
LT GRN
1037 LT GRN B6 C1 SERIAL DATA
1571 BRN/WHT D15 C2 TRAC SW
BODY CONTROL MODULE (BCM) (MOUNTED ON TOE BOARD, IN RIGHT FOOTWELL)
464 TAN/BLK 5 C2 DEL TORQUE
463 ORG/BLK 13 C1 REQ TORQUE
POWERTRAIN CONTROL MODULE (PCM) (BEHIND RIGHT FRONT FENDER, BETWEEN WHEEL-HOUSE & DASH PANEL)
(IN FORWARD LIGHT HARNESS, 12.5 CM FROM BREAKOUT TO ECBM CONNECTOR)
S105
ORG/BLK
GRY
GRY 1
ORG 3
BLK 2
BRAKE FLUID PRESSURE SENSOR (ON LEFT SIDE OF BRAKE PRESSURE MODULATOR VALVE)
(IN FORWARD LIGHT HARNESS, 6 CM FROM BREAKOUT TO EBCM CONNECTOR)
ORG/BLK
ORG/BLK C
GRY A
LT GRN/BLK B
GRY
S108
LATERAL ACCELEROMETER SENSOR (W/ ACTIVE HANDLING) (UNDER RIGHT SEAT)
GRY
S310
S308
GRY A
ORG/BLK B
DK BLU C
(IN DASH HARNESS, 11 CM FROM YAW RATE SENSOR CONNECTOR)
(IN DASH HARNESS, 19 CM FROM YAW RATE SENSOR CONNECTOR)
YAW RATE SENSOR (W/ ACTIVE HANDLING) (UNDER HVAC CONTROL HEAD)
ORG/BLK 2
LT GRN 5
GRY 1
LT BLU 6
STEERING WHEEL POSITION SENSOR (AT BASE OF STEERING COLUMN)
YEL
LT BLU
TAN
DK GRN
LT BLU
C7 C2
STR POS SENS SIG
ELECTRONIC SUSPENSION CONTROL (ESC) MODULE (IN REAR COMPARTMENT, INSIDE LEFT STORAGE COMPARTMENT)
A WHT NCA
B BLK NCA
B BLK NCA
A WHT NCA
B WHT NCA
A BRN NCA
A BLK NCA
B RED NCA
LEFT FRONT WHEEL SPEED SENSOR (WSS) (LEFT FRONT WHEEL)
RIGHT FRONT WHEEL SPEED SENSOR (WSS) (RIGHT FRONT WHEEL)
RIGHT REAR WHEEL SPEED SENSOR (WSS) (RIGHT REAR WHEEL)
LEFT REAR WHEEL SPEED SENSOR (WSS) (LEFT REAR WHEEL)
185976

Fig. 3: Anti-lock Brakes Circuit

ANTI-THEFT

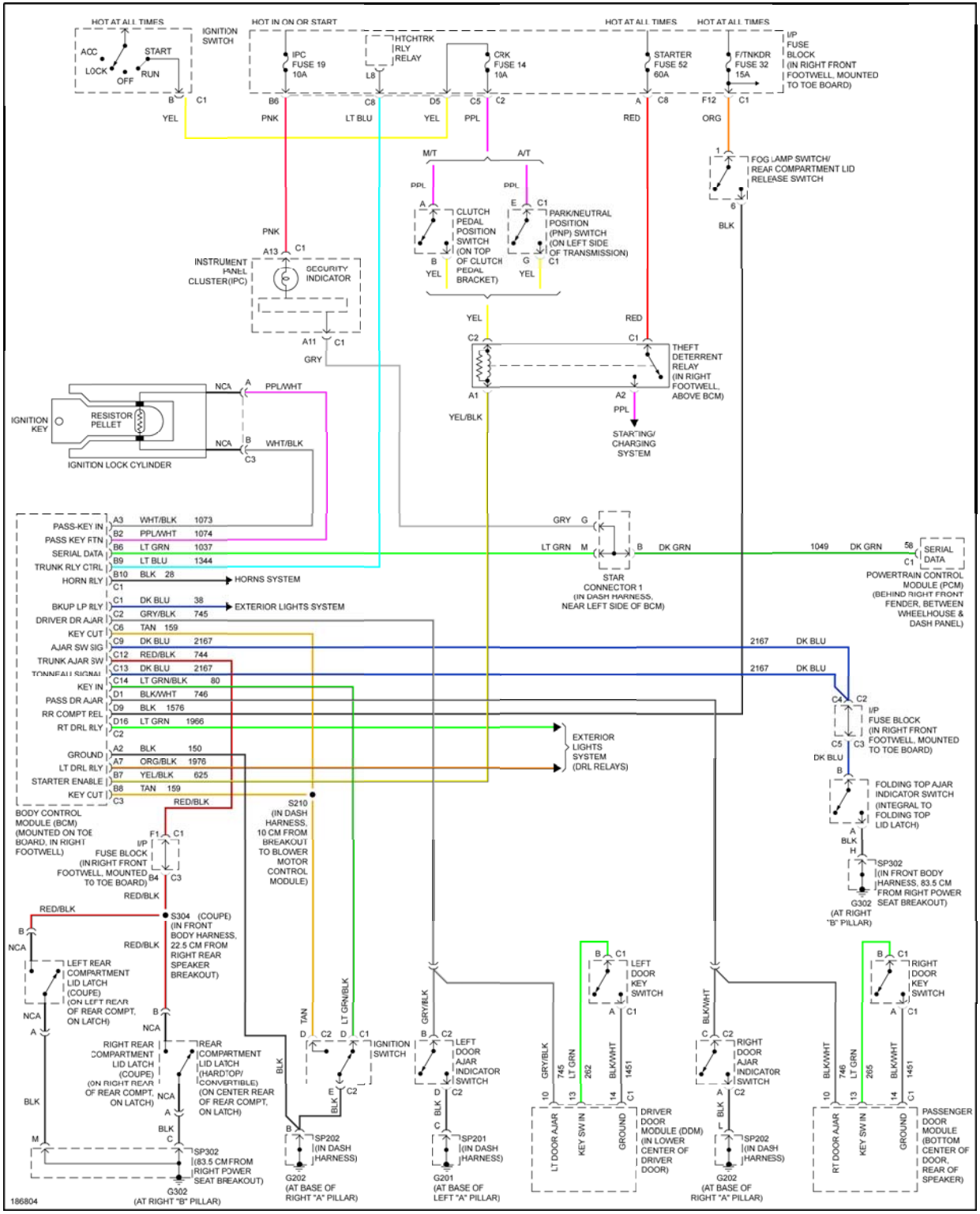
HOT AT ALL TIMES
IGNITION SWITCH
ACC
START
LOCK
RUN
OFF
HOT IN ON OR START
IPC FUSE 19 10A
HTCHTRK RLY RELAY
CRK FUSE 14 10A
HOT AT ALL TIMES
STARTER FUSE 52 60A
HOT AT ALL TIMES
F/TNKDR FUSE 32 15A
I/P FUSE BLOCK (IN RIGHT FRONT FOOTWELL, MOUNTED TO TOE BOARD)
YEL
PNK
LT BLU
YEL
PPL
RED
ORG
M/T
A/T
PPL
PPL
CLUTCH PEDAL POSITION SWITCH (ON TOP OF CLUTCH PEDAL BRACKET)
PARK/NEUTRAL POSITION (PNP) SWITCH (ON LEFT SIDE OF TRANSMISSION)
FOG LAMP SWITCH/ REAR COMPARTMENT LID RELEASE SWITCH
BLK
PNK
INSTRUMENT PANEL CLUSTER (IPC)
SECURITY INDICATOR
YEL
YEL
RED
GRY
THEFT DETERRENT RELAY (IN RIGHT FOOTWELL, ABOVE BCM)
YEL/BLK
PPL
STARTING/ CHARGING SYSTEM
IGNITION KEY
RESISTOR PELLET
NCA
PPL/WHT
NCA
WHT/BLK
IGNITION LOCK CYLINDER
PASS-KEY IN
PASS KEY RTN
SERIAL DATA
TRUNK RLY CTRL
HORN RLY
BKUP LP RLY
DRIVER DR AJAR
KEY CUT
AJAR SW SIG
TRUNK AJAR SW
TONNEAU SIGNAL
KEY IN
PASS DR AJAR
RR COMPT REL
RT DRL RLY
GROUND
LT DRL RLY
STARTER ENABLE
KEY CUT
A3 WHT/BLK 1073
B2 PPL/WHT 1074
B6 LT GRN 1037
B9 LT BLU 1344
B10 BLK 28
HORNS SYSTEM
C1 DK BLU 38
C2 GRY/BLK 745
EXTERIOR LIGHTS SYSTEM
C6 TAN 159
C9 DK BLU 2167
C12 RED/BLK 744
C13 DK BLU 2167
C14 LT GRN/BLK 80
D1 BLK/WHT 746
D9 BLK 1576
D16 LT GRN 1966
A2 BLK 150
A7 ORG/BLK 1976
B7 YEL/BLK 625
B8 TAN 159
C3
BODY CONTROL MODULE (BCM) (MOUNTED ON TOE BOARD, IN RIGHT FOOTWELL)
GRY
LT GRN
DK GRN
1049 DK GRN
SERIAL DATA
STAR CONNECTOR 1 (IN DASH HARNESS, NEAR LEFT SIDE OF BCM)
POWERTRAIN CONTROL MODULE (PCM) (BEHIND RIGHT FRONT FENDER, BETWEEN WHEELHOUSE & DASH PANEL)
2167 DK BLU
2167 DK BLU
EXTERIOR LIGHTS SYSTEM (DRL RELAYS)
I/P FUSE BLOCK (IN RIGHT FRONT FOOTWELL, MOUNTED TO TOE BOARD)
DK BLU
FOLDING TOP AJAR INDICATOR SWITCH (INTEGRAL TO FOLDING TOP LID LATCH)
BLK
SP302 (IN FRONT BODY HARNESS, 83.5 CM FROM RIGHT POWER SEAT BREAKOUT)
G302 (AT RIGHT "B" PILLAR)
S210 (IN DASH HARNESS, 10 CM FROM BREAKOUT TO BLOWER MOTOR CONTROL MODULE)
RED/BLK
I/P FUSE BLOCK (IN RIGHT FRONT FOOTWELL, MOUNTED TO TOE BOARD)
RED/BLK
RED/BLK
S304 (COUPE) (IN FRONT BODY HARNESS, 22.5 CM FROM RIGHT REAR SPEAKER BREAKOUT)
RED/BLK
NCA
LEFT REAR COMPARTMENT LID LATCH (COUPE) (ON LEFT REAR OF REAR COMPT, ON LATCH)
NCA
NCA
RIGHT REAR COMPARTMENT LID LATCH (COUPE) (ON RIGHT REAR OF REAR COMPT, ON LATCH)
REAR COMPARTMENT LID LATCH (HARDTOP/ CONVERTIBLE) (ON CENTER REAR OF REAR COMPT, ON LATCH)
NCA
BLK
BLK
BLK
SP302 (83.5 CM FROM RIGHT POWER SEAT BREAKOUT)
G302 (AT RIGHT "B" PILLAR)
TAN
LT GRN/BLK
IGNITION SWITCH
BLK
SP202 (IN DASH HARNESS)
G202 (AT BASE OF RIGHT "A" PILLAR)
GRY/BLK
LEFT DOOR AJAR INDICATOR SWITCH
BLK
SP201 (IN DASH HARNESS)
G201 (AT BASE OF LEFT "A" PILLAR)
GRY/BLK
745 LT GRN
262
BLK/WHT
1451
LT DOOR AJAR
KEY SW IN
GROUND
LEFT DOOR KEY SWITCH
DRIVER DOOR MODULE (DDM) (IN LOWER CENTER OF DRIVER DOOR)
BLK/WHT
RIGHT DOOR AJAR INDICATOR SWITCH
BLK
SP202 (IN DASH HARNESS)
G202 (AT BASE OF RIGHT "A" PILLAR)
BLK/WHT
746 LT GRN
265
BLK/WHT
1451
RT DOOR AJAR
KEY SW IN
GROUND
RIGHT DOOR KEY SWITCH
PASSENGER DOOR MODULE (BOTTOM CENTER OF DOOR, REAR OF SPEAKER)
186804

Fig. 4: Anti-theft Circuit

BODY CONTROL MODULES

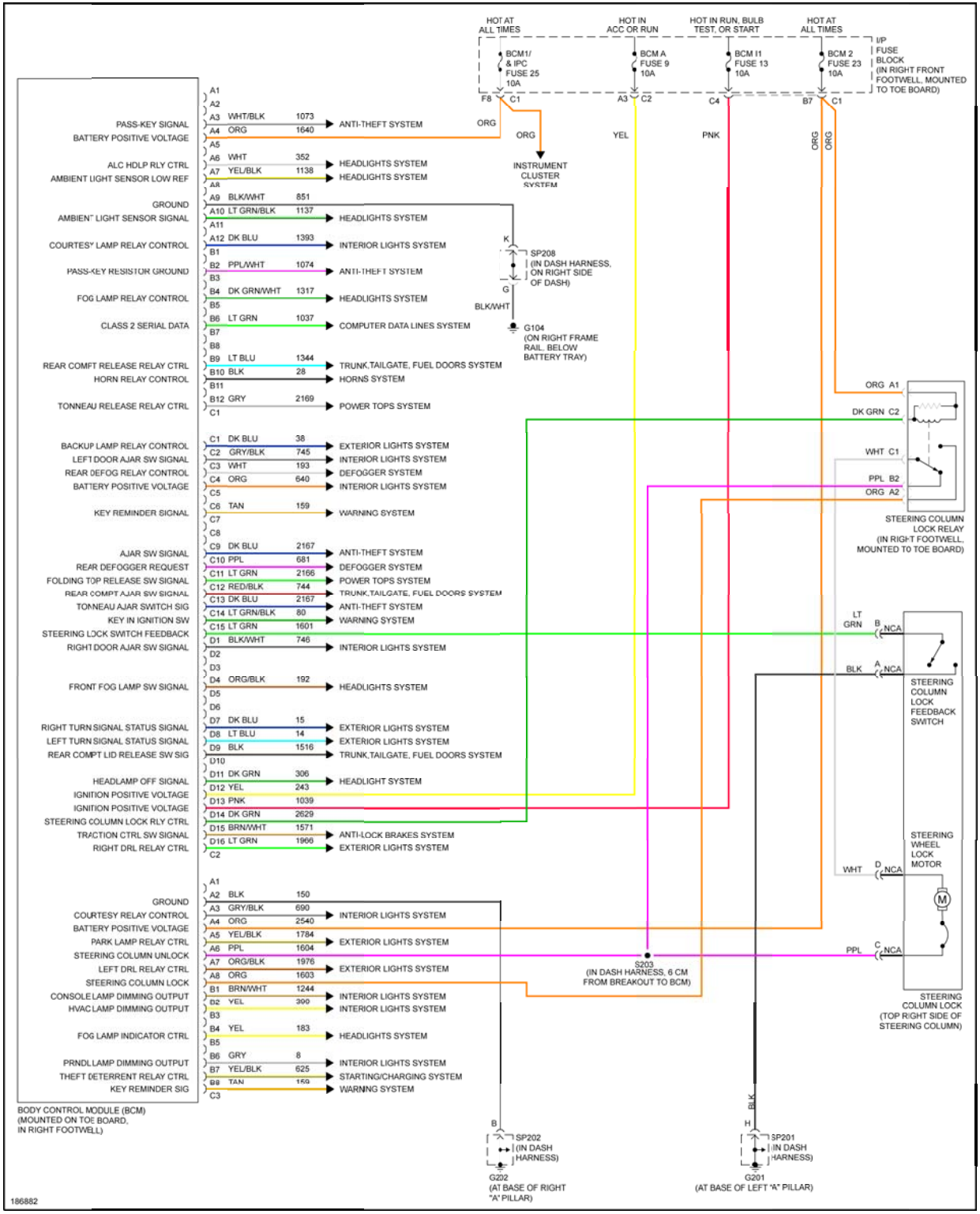
HOT AT ALL TIMES
HOT IN ACC OR RUN
HOT IN RUN, BULB TEST, OR START
HOT AT ALL TIMES
BCM1/ & IPC FUSE 25 10A
BCM A FUSE 9 10A
BCM I1 FUSE 13 10A
BCM 2 FUSE 23 10A
I/P FUSE BLOCK (IN RIGHT FRONT FOOTWELL, MOUNTED TO TOE BOARD)
F8 C1
A3 C2
C4
B7 C1
ORG
ORG
YEL
PNK
ORG
ORG
INSTRUMENT CLUSTER SYSTEM
A1
A2
A3 WHT/BLK 1073 ANTI-THEFT SYSTEM
PASS-KEY SIGNAL
A4 ORG 1640
BATTERY POSITIVE VOLTAGE
A5
A6 WHT 352 HEADLIGHTS SYSTEM
ALC HDLP RLY CTRL
A7 YEL/BLK 1138 HEADLIGHTS SYSTEM
AMBIENT LIGHT SENSOR LOW REF
A8
A9 BLK/WHT 851
GROUND
A10 LT GRN/BLK 1137 HEADLIGHTS SYSTEM
AMBIENT LIGHT SENSOR SIGNAL
A11
A12 DK BLU 1393 INTERIOR LIGHTS SYSTEM
COURTESY LAMP RELAY CONTROL
B1
B2 PPL/WHT 1074 ANTI-THEFT SYSTEM
PASS-KEY RESISTOR GROUND
B3
B4 DK GRN/WHT 1317 HEADLIGHTS SYSTEM
FOG LAMP RELAY CONTROL
B5
B6 LT GRN 1037 COMPUTER DATA LINES SYSTEM
CLASS 2 SERIAL DATA
B7
B8
B9 LT BLU 1344 TRUNK,TAILGATE, FUEL DOORS SYSTEM
REAR COMPT RELEASE RELAY CTRL
B10 BLK 28 HORNS SYSTEM
HORN RELAY CONTROL
B11
B12 GRY 2169 POWER TOPS SYSTEM
TONNEAU RELEASE RELAY CTRL
C1
K
SP208 (IN DASH HARNESS, ON RIGHT SIDE OF DASH)
G
BLK/WHT
G104 (ON RIGHT FRAME RAIL, BELOW BATTERY TRAY)
C1 DK BLU 38 EXTERIOR LIGHTS SYSTEM
BACKUP LAMP RELAY CONTROL
C2 GRY/BLK 745 INTERIOR LIGHTS SYSTEM
LEFT DOOR AJAR SW SIGNAL
C3 WHT 193 DEFOGGER SYSTEM
REAR DEFOG RELAY CONTROL
C4 ORG 640 INTERIOR LIGHTS SYSTEM
BATTERY POSITIVE VOLTAGE
C5
C6 TAN 159 WARNING SYSTEM
KEY REMINDER SIGNAL
C7
C8
C9 DK BLU 2167 ANTI-THEFT SYSTEM
AJAR SW SIGNAL
C10 PPL 681 DEFOGGER SYSTEM
REAR DEFOGGER REQUEST
C11 LT GRN 2166 POWER TOPS SYSTEM
FOLDING TOP RELEASE SW SIGNAL
C12 RED/BLK 744 TRUNK,TAILGATE, FUEL DOORS SYSTEM
REAR COMPT AJAR SW SIGNAL
C13 DK BLU 2167 ANTI-THEFT SYSTEM
TONNEAU AJAR SWITCH SIG
C14 LT GRN/BLK 80 WARNING SYSTEM
KEY IN IGNITION SW
C15 LT GRN 1601
STEERING LOCK SWITCH FEEDBACK
D1 BLK/WHT 746 INTERIOR LIGHTS SYSTEM
RIGHT DOOR AJAR SW SIGNAL
D2
D3
D4 ORG/BLK 192 HEADLIGHTS SYSTEM
FRONT FOG LAMP SW SIGNAL
D5
D6
D7 DK BLU 15 EXTERIOR LIGHTS SYSTEM
RIGHT TURN SIGNAL STATUS SIGNAL
D8 LT BLU 14 EXTERIOR LIGHTS SYSTEM
LEFT TURN SIGNAL STATUS SIGNAL
D9 BLK 1516 TRUNK,TAILGATE, FUEL DOORS SYSTEM
REAR COMPT LID RELEASE SW SIG
D10
D11 DK GRN 306 HEADLIGHT SYSTEM
HEADLAMP OFF SIGNAL
D12 YEL 243
IGNITION POSITIVE VOLTAGE
D13 PNK 1039
IGNITION POSITIVE VOLTAGE
D14 DK GRN 2629
STEERING COLUMN LOCK RLY CTRL
D15 BRN/WHT 1571 ANTI-LOCK BRAKES SYSTEM
TRACTION CTRL SW SIGNAL
D16 LT GRN 1966 EXTERIOR LIGHTS SYSTEM
RIGHT DRL RELAY CTRL
C2
A1
A2 BLK 150
GROUND
A3 GRY/BLK 690 INTERIOR LIGHTS SYSTEM
COURTESY RELAY CONTROL
A4 ORG 2540
BATTERY POSITIVE VOLTAGE
A5 YEL/BLK 1784 EXTERIOR LIGHTS SYSTEM
PARK LAMP RELAY CTRL
A6 PPL 1604
STEERING COLUMN UNLOCK
A7 ORG/BLK 1976 EXTERIOR LIGHTS SYSTEM
LEFT DRL RELAY CTRL
A8 ORG 1603
STEERING COLUMN LOCK
B1 BRN/WHT 1244 INTERIOR LIGHTS SYSTEM
CONSOLE LAMP DIMMING OUTPUT
B2 YEL 399 INTERIOR LIGHTS SYSTEM
HVAC LAMP DIMMING OUTPUT
B3
B4 YEL 183 HEADLIGHTS SYSTEM
FOG LAMP INDICATOR CTRL
B5
B6 GRY 8 INTERIOR LIGHTS SYSTEM
PRNDL LAMP DIMMING OUTPUT
B7 YEL/BLK 625 STARTING/CHARGING SYSTEM
THEFT DETERRENT RELAY CTRL
B8 TAN 159 WARNING SYSTEM
KEY REMINDER SIG
C3
BODY CONTROL MODULE (BCM) (MOUNTED ON TOE BOARD, IN RIGHT FOOTWELL)
ORG A1
DK GRN C2
WHT C1
PPL B2
ORG A2
STEERING COLUMN LOCK RELAY (IN RIGHT FOOTWELL, MOUNTED TO TOE BOARD)
LT GRN B NCA
BLK A NCA
STEERING COLUMN LOCK FEEDBACK SWITCH
WHT D NCA
PPL C NCA
STEERING WHEEL LOCK MOTOR
M
STEERING COLUMN LOCK (TOP RIGHT SIDE OF STEERING COLUMN)
S203 (IN DASH HARNESS, 6 CM FROM BREAKOUT TO BCM)
BLK
B
SP202 (IN DASH HARNESS)
G202 (AT BASE OF RIGHT "A" PILLAR)
H
SP201 (IN DASH HARNESS)
G201 (AT BASE OF LEFT "A" PILLAR)
186882

Fig. 5: Body Control Modules Circuit

COMPUTER DATA LINES

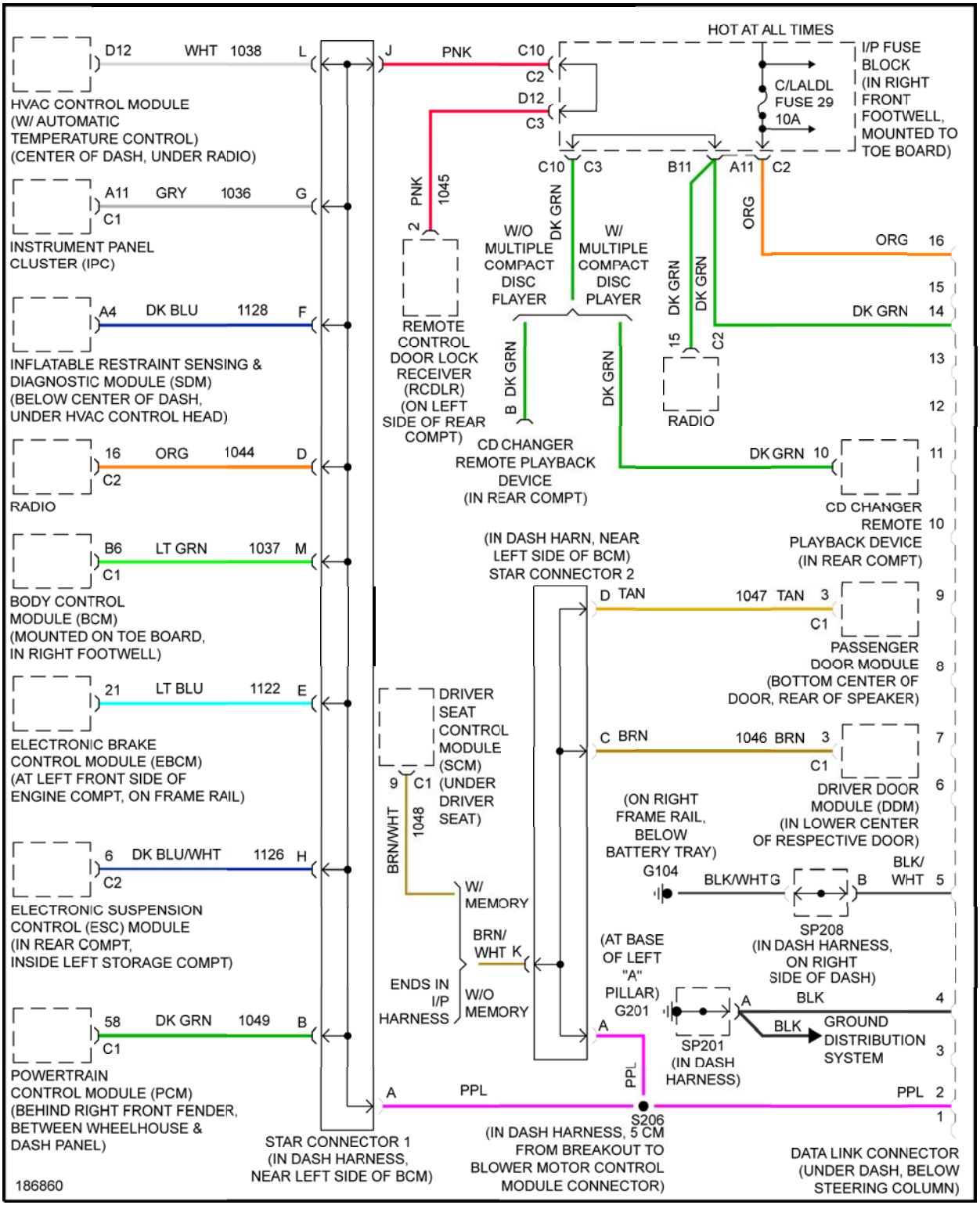
HOT AT ALL TIMES
I/P FUSE BLOCK (IN RIGHT FRONT FOOTWELL, MOUNTED TO TOE BOARD)
C/LALDL FUSE 29 10A
HVAC CONTROL MODULE (W/ AUTOMATIC TEMPERATURE CONTROL) (CENTER OF DASH, UNDER RADIO)
D12 WHT 1038 L
J PNK C10
C2
D12
C3
INSTRUMENT PANEL CLUSTER (IPC)
A11 GRY 1036 G
C1
PNK 1045
2
REMOTE CONTROL DOOR LOCK RECEIVER (RCDLR) (ON LEFT SIDE OF REAR COMPT)
C10 C3 B11 A11 C2
DK GRN
W/O MULTIPLE COMPACT DISC PLAYER
W/ MULTIPLE COMPACT DISC PLAYER
ORG
ORG 16
15
DK GRN 14
INFLATABLE RESTRAINT SENSING & DIAGNOSTIC MODULE (SDM) (BELOW CENTER OF DASH, UNDER HVAC CONTROL HEAD)
A4 DK BLU 1128 F
B DK GRN
DK GRN
15
C2
RADIO
13
12
CD CHANGER REMOTE PLAYBACK DEVICE (IN REAR COMPT)
DK GRN 10
11
CD CHANGER REMOTE PLAYBACK DEVICE (IN REAR COMPT)
10
RADIO
16 ORG 1044 D
C2
BODY CONTROL MODULE (BCM) (MOUNTED ON TOE BOARD, IN RIGHT FOOTWELL)
B6 LT GRN 1037 M
C1
(IN DASH HARN, NEAR LEFT SIDE OF BCM) STAR CONNECTOR 2
D TAN
1047 TAN 3
C1
9
PASSENGER DOOR MODULE (BOTTOM CENTER OF DOOR, REAR OF SPEAKER)
8
ELECTRONIC BRAKE CONTROL MODULE (EBCM) (AT LEFT FRONT SIDE OF ENGINE COMPT, ON FRAME RAIL)
21 LT BLU 1122 E
DRIVER SEAT CONTROL MODULE (SCM) (UNDER DRIVER SEAT)
9 C1
BRN/WHT 1048
C BRN
1046 BRN 3
C1
7
DRIVER DOOR MODULE (DDM) (IN LOWER CENTER OF RESPECTIVE DOOR)
6
(ON RIGHT FRAME RAIL, BELOW BATTERY TRAY)
G104
BLK/WHT G
B
BLK/ WHT 5
SP208 (IN DASH HARNESS, ON RIGHT SIDE OF DASH)
ELECTRONIC SUSPENSION CONTROL (ESC) MODULE (IN REAR COMPT, INSIDE LEFT STORAGE COMPT)
6 DK BLU/WHT 1126 H
C2
W/ MEMORY
BRN/ WHT K
ENDS IN I/P HARNESS
W/O MEMORY
(AT BASE OF LEFT "A" PILLAR) G201
A
BLK
4
BLK
GROUND DISTRIBUTION SYSTEM
3
SP201 (IN DASH HARNESS)
A
PPL
POWERTRAIN CONTROL MODULE (PCM) (BEHIND RIGHT FRONT FENDER, BETWEEN WHEELHOUSE & DASH PANEL)
58 DK GRN 1049 B
C1
A PPL
PPL 2
1
S206
STAR CONNECTOR 1 (IN DASH HARNESS, NEAR LEFT SIDE OF BCM)
(IN DASH HARNESS, 5 CM FROM BREAKOUT TO BLOWER MOTOR CONTROL MODULE CONNECTOR)
DATA LINK CONNECTOR (UNDER DASH, BELOW STEERING COLUMN)
186860

Fig. 6: Computer Data Lines Circuit

COOLING FAN

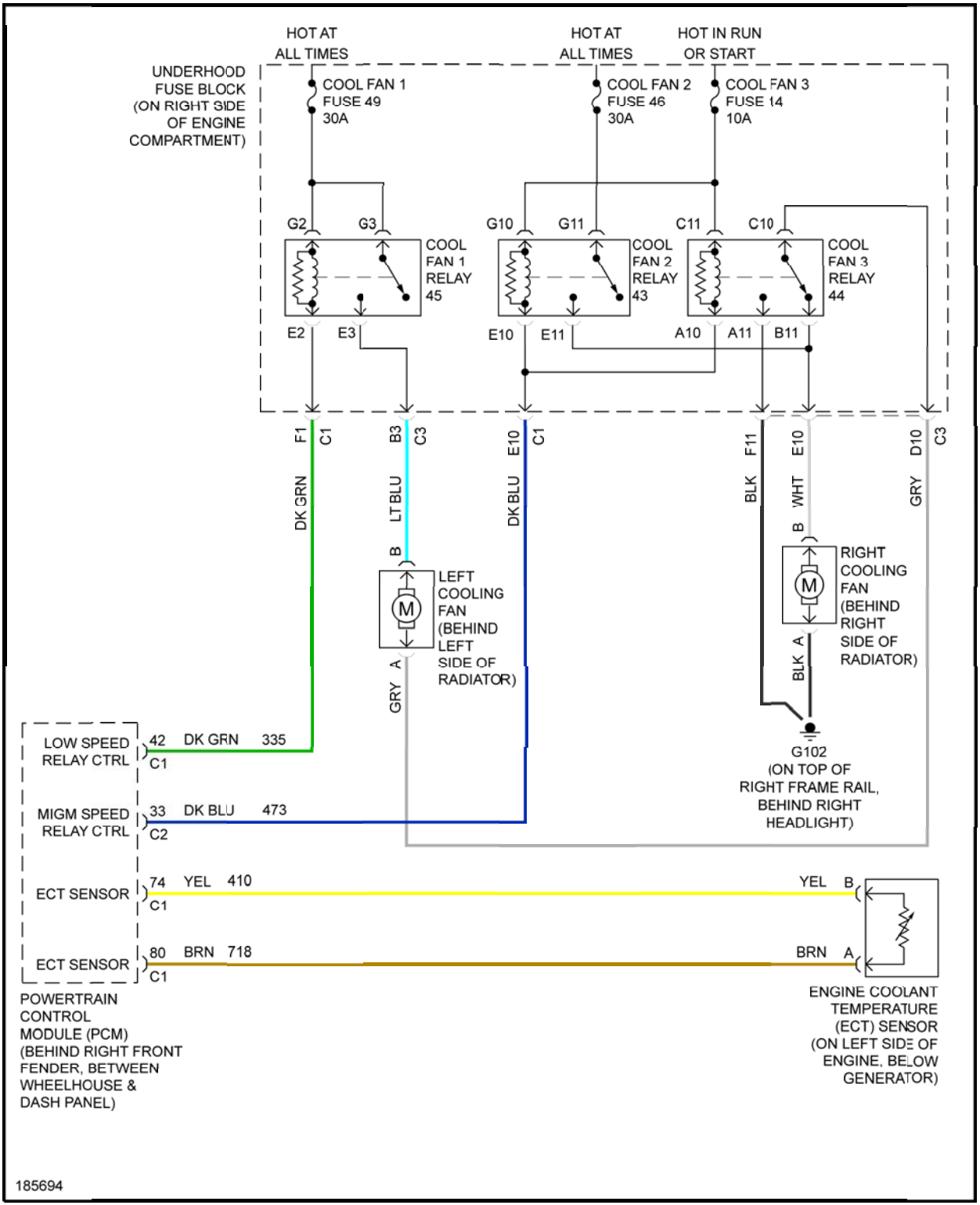
HOT AT ALL TIMES
HOT AT ALL TIMES
HOT IN RUN OR START
UNDERHOOD FUSE BLOCK (ON RIGHT SIDE OF ENGINE COMPARTMENT)
COOL FAN 1 FUSE 49 30A
COOL FAN 2 FUSE 46 30A
COOL FAN 3 FUSE 14 10A
G2
G3
G10
G11
C11
C10
COOL FAN 1 RELAY 45
COOL FAN 2 RELAY 43
COOL FAN 3 RELAY 44
E2
E3
E10
E11
A10
A11
B11
F1
C1
B3
C3
E10
C1
F11
E10
D10
C3
DK GRN
LT BLU
DK BLU
BLK
WHT
GRY
B
A
LEFT COOLING FAN (BEHIND LEFT SIDE OF RADIATOR)
RIGHT COOLING FAN (BEHIND RIGHT SIDE OF RADIATOR)
G102 (ON TOP OF RIGHT FRAME RAIL, BEHIND RIGHT HEADLIGHT)
LOW SPEED RELAY CTRL
42
C1
DK GRN
335
MIGM SPEED RELAY CTRL
33
C2
DK BLU
473
ECT SENSOR
74
C1
YEL
410
ECT SENSOR
80
C1
BRN
718
YEL
B
BRN
A
POWERTRAIN CONTROL MODULE (PCM) (BEHIND RIGHT FRONT FENDER, BETWEEN WHEELHOUSE & DASH PANEL)
ENGINE COOLANT TEMPERATURE (ECT) SENSOR (ON LEFT SIDE OF ENGINE, BELOW GENERATOR)
185694

Fig. 7: Cooling Fan Circuit

CRUISE CONTROL

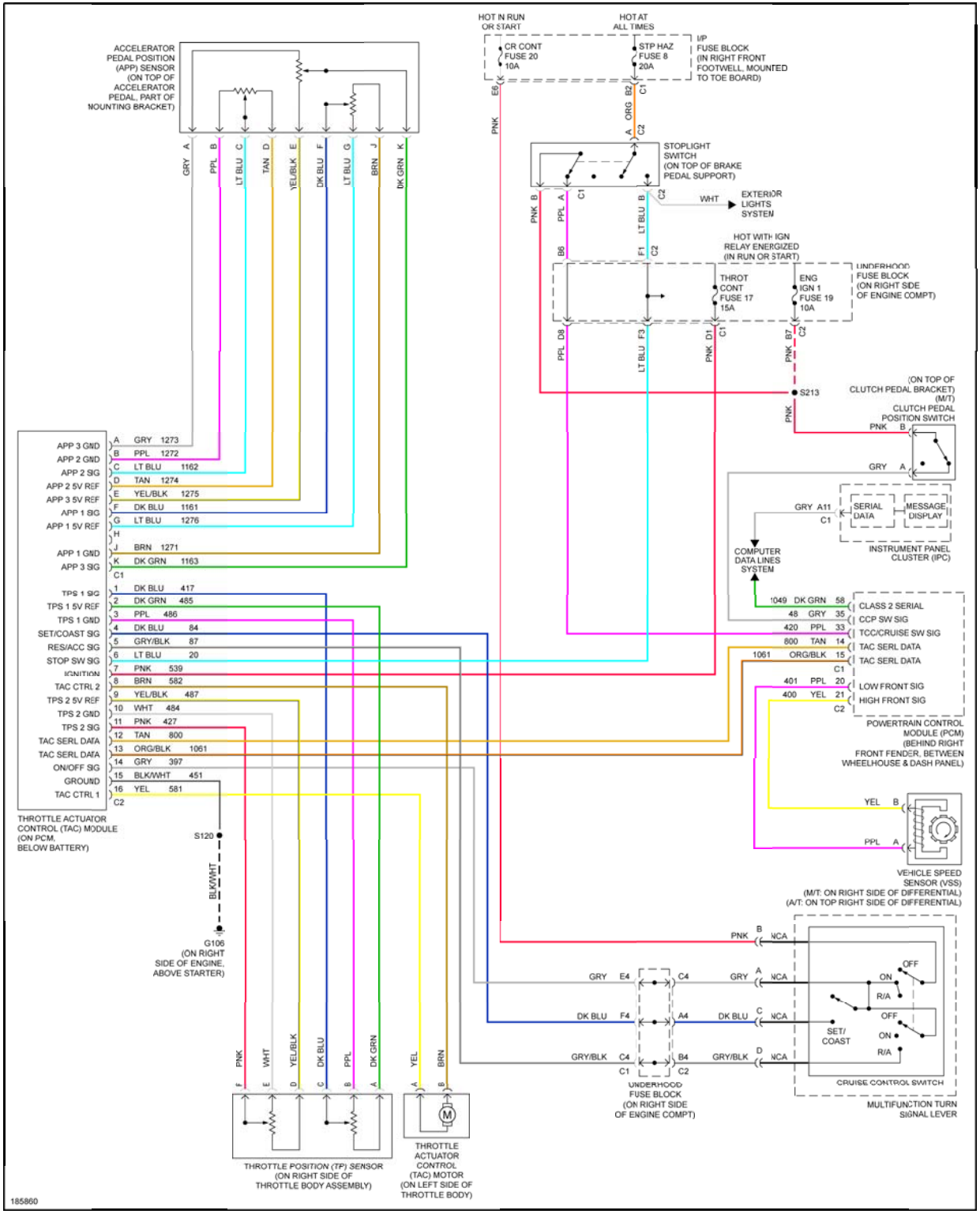
ACCELERATOR PEDAL POSITION (APP) SENSOR (ON TOP OF ACCELERATOR PEDAL, PART OF MOUNTING BRACKET)
HOT IN RUN OR START
HOT AT ALL TIMES
CR CONT FUSE 20 10A
STP HAZ FUSE 8 20A
I/P FUSE BLOCK (IN RIGHT FRONT FOOTWELL, MOUNTED TO TOE BOARD)
STOPLIGHT SWITCH (ON TOP OF BRAKE PEDAL SUPPORT)
EXTERIOR LIGHTS SYSTEM
HOT WITH IGN RELAY ENERGIZED (IN RUN OR START)
THROT CONT FUSE 17 15A
ENG IGN 1 FUSE 19 10A
UNDERHOOD FUSE BLOCK (ON RIGHT SIDE OF ENGINE COMPT)
S213
(ON TOP OF CLUTCH PEDAL BRACKET) (M/T)
CLUTCH PEDAL POSITION SWITCH
SERIAL DATA
MESSAGE DISPLAY
INSTRUMENT PANEL CLUSTER (IPC)
COMPUTER DATA LINES SYSTEM
CLASS 2 SERIAL
CCP SW SIG
TCC/CRUISE SW SIG
TAC SERL DATA
TAC SERL DATA
LOW FRONT SIG
HIGH FRONT SIG
POWERTRAIN CONTROL MODULE (PCM) (BEHIND RIGHT FRONT FENDER, BETWEEN WHEELHOUSE & DASH PANEL)
APP 3 GND
APP 2 GND
APP 2 SIG
APP 2 5V REF
APP 3 5V REF
APP 1 SIG
APP 1 5V REF
APP 1 GND
APP 3 SIG
TPS 1 SIG
TPS 1 5V REF
TPS 1 GND
SET/COAST SIG
RES/ACC SIG
STOP SW SIG
IGNITION
TAC CTRL 2
TPS 2 5V REF
TPS 2 GND
TPS 2 SIG
TAC SERL DATA
TAC SERL DATA
ON/OFF SIG
GROUND
TAC CTRL 1
THROTTLE ACTUATOR CONTROL (TAC) MODULE (ON PCM, BELOW BATTERY)
S120
BLK/WHT
G106 (ON RIGHT SIDE OF ENGINE, ABOVE STARTER)
VEHICLE SPEED SENSOR (VSS) (M/T: ON RIGHT SIDE OF DIFFERENTIAL) (A/T: ON TOP RIGHT SIDE OF DIFFERENTIAL)
UNDERHOOD FUSE BLOCK (ON RIGHT SIDE OF ENGINE COMPT)
CRUISE CONTROL SWITCH
SET/ COAST
MULTIFUNCTION TURN SIGNAL LEVER
THROTTLE POSITION (TP) SENSOR (ON RIGHT SIDE OF THROTTLE BODY ASSEMBLY)
THROTTLE ACTUATOR CONTROL (TAC) MOTOR (ON LEFT SIDE OF THROTTLE BODY)
185860

Fig. 8: Cruise Control Circuit

DEFOGGERS

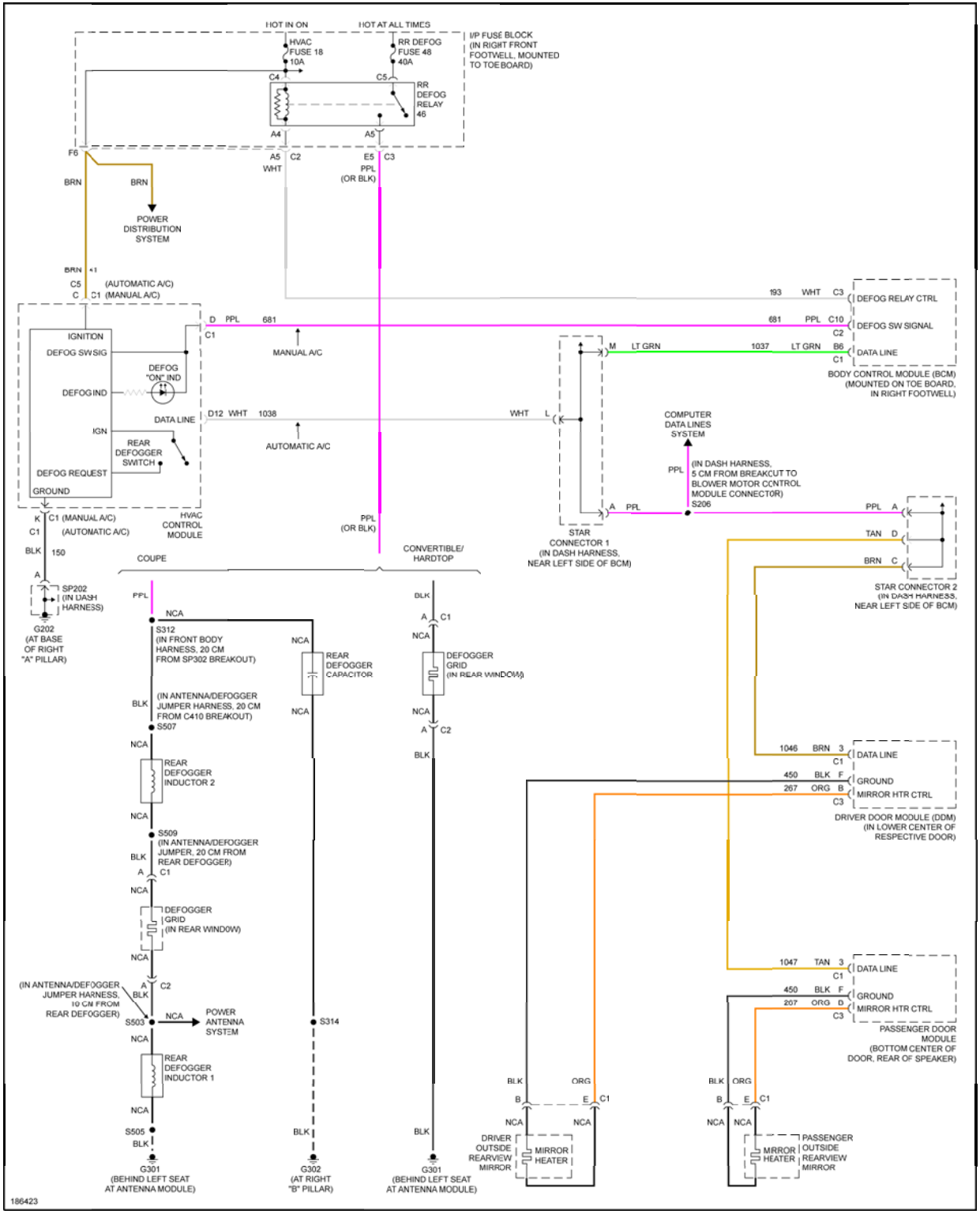
HOT IN ON
HOT AT ALL TIMES
HVAC FUSE 18 10A
RR DEFOG FUSE 48 40A
I/P FUSE BLOCK (IN RIGHT FRONT FOOTWELL, MOUNTED TO TOE BOARD)
RR DEFOG RELAY 46
C4
C5
A4
A5
F6
BRN
POWER DISTRIBUTION SYSTEM
A5 WHT
C2
E5 PPL (OR BLK)
C3
C5 (AUTOMATIC A/C)
C1 (MANUAL A/C)
IGNITION
DEFOG SW SIG
DEFOG "ON" IND
DEFOG IND
IGN
DATA LINE
REAR DEFOGGER SWITCH
DEFOG REQUEST
GROUND
D PPL 681
MANUAL A/C
D12 WHT 1038
AUTOMATIC A/C
K C1 (MANUAL A/C)
C1 (AUTOMATIC A/C)
HVAC CONTROL MODULE
BLK 150
SP202 (IN DASH HARNESS)
G202 (AT BASE OF RIGHT "A" PILLAR)
COUPE
CONVERTIBLE/ HARDTOP
PPL
NCA
S312 (IN FRONT BODY HARNESS, 20 CM FROM SP302 BREAKOUT)
REAR DEFOGGER CAPACITOR
(IN ANTENNA/DEFOGGER JUMPER HARNESS, 20 CM FROM C410 BREAKOUT)
S507
REAR DEFOGGER INDUCTOR 2
S509 (IN ANTENNA/DEFOGGER JUMPER, 20 CM FROM REAR DEFOGGER)
DEFOGGER GRID (IN REAR WINDOW)
(IN ANTENNA/DEFOGGER JUMPER HARNESS, 10 CM FROM REAR DEFOGGER)
S503
POWER ANTENNA SYSTEM
REAR DEFOGGER INDUCTOR 1
S505
G301 (BEHIND LEFT SEAT AT ANTENNA MODULE)
S314
G302 (AT RIGHT "B" PILLAR)
DEFOGGER GRID (IN REAR WINDOW)
G301 (BEHIND LEFT SEAT AT ANTENNA MODULE)
193 WHT C3
DEFOG RELAY CTRL
681 PPL C10
DEFOG SW SIGNAL
M LT GRN
1037 LT GRN B6
DATA LINE
BODY CONTROL MODULE (BCM) (MOUNTED ON TOE BOARD, IN RIGHT FOOTWELL)
WHT L
COMPUTER DATA LINES SYSTEM
PPL (IN DASH HARNESS, 5 CM FROM BREAKOUT TO BLOWER MOTOR CONTROL MODULE CONNECTOR) S206
A PPL
STAR CONNECTOR 1 (IN DASH HARNESS, NEAR LEFT SIDE OF BCM)
PPL A
TAN D
BRN C
STAR CONNECTOR 2 (IN DASH HARNESS, NEAR LEFT SIDE OF BCM)
1046 BRN 3
DATA LINE
450 BLK F
GROUND
267 ORG B
MIRROR HTR CTRL
DRIVER DOOR MODULE (DDM) (IN LOWER CENTER OF RESPECTIVE DOOR)
1047 TAN 3
DATA LINE
450 BLK F
GROUND
267 ORG B
MIRROR HTR CTRL
PASSENGER DOOR MODULE (BOTTOM CENTER OF DOOR, REAR OF SPEAKER)
BLK ORG
DRIVER OUTSIDE REARVIEW MIRROR
MIRROR HEATER
PASSENGER OUTSIDE REARVIEW MIRROR
186423

Fig. 9: Defoggers Circuit

ELECTRONIC POWER STEERING

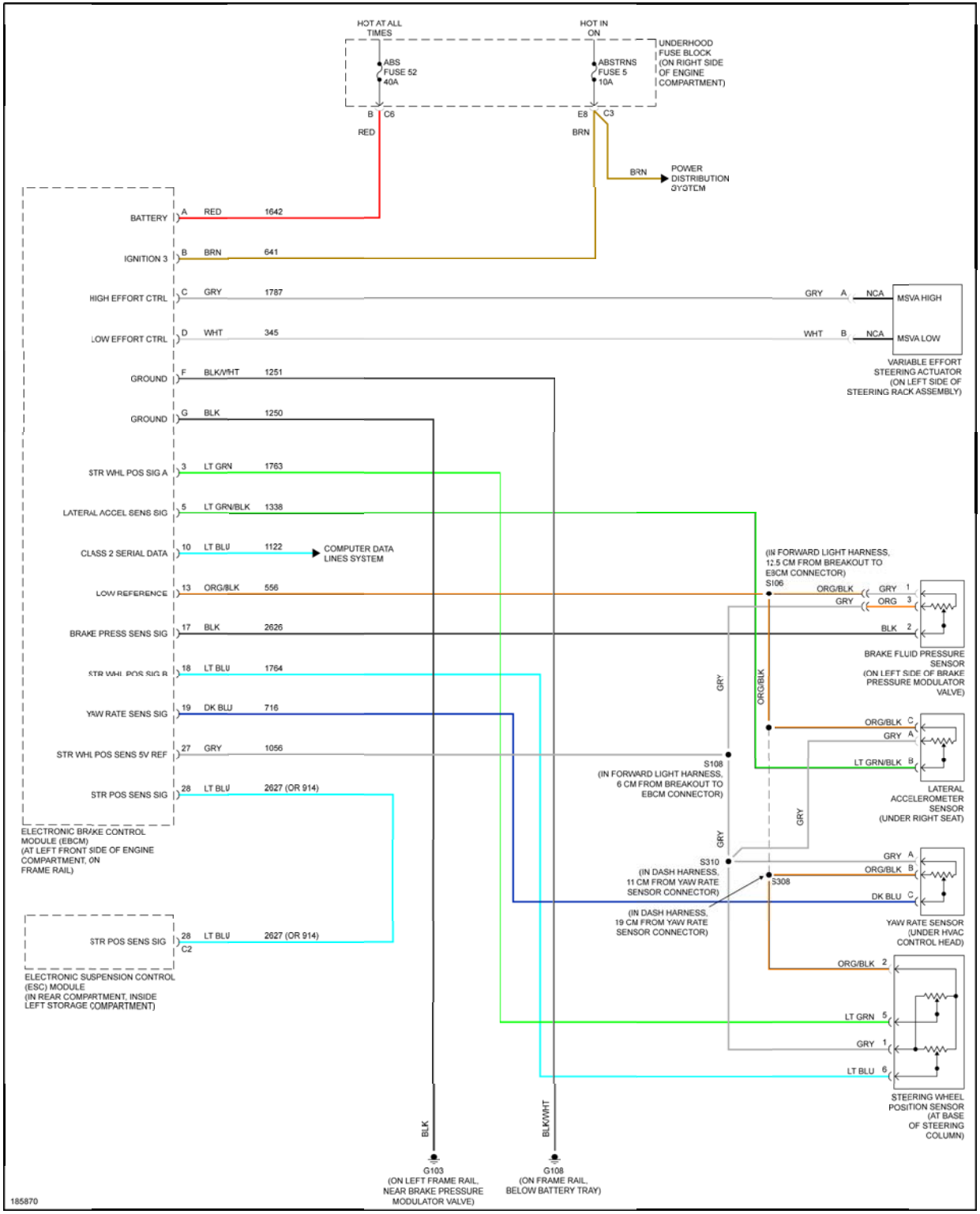
HOT AT ALL TIMES
HOT IN ON
ABS FUSE 52 40A
ABSTRNS FUSE 5 10A
UNDERHOOD FUSE BLOCK (ON RIGHT SIDE OF ENGINE COMPARTMENT)
B C6
E8 C3
RED
BRN
BRN
POWER DISTRIBUTION SYSTEM
BATTERY A RED 1642
IGNITION 3 B BRN 641
HIGH EFFORT CTRL C GRY 1787
LOW EFFORT CTRL D WHT 345
GRY A NCA MSVA HIGH
WHT B NCA MSVA LOW
VARIABLE EFFORT STEERING ACTUATOR (ON LEFT SIDE OF STEERING RACK ASSEMBLY)
GROUND F BLK/WHT 1251
GROUND G BLK 1250
STR WHL POS SIG A 3 LT GRN 1763
LATERAL ACCEL SENS SIG 5 LT GRN/BLK 1338
CLASS 2 SERIAL DATA 10 LT BLU 1122
COMPUTER DATA LINES SYSTEM
LOW REFERENCE 13 ORG/BLK 556
BRAKE PRESS SENS SIG 17 BLK 2626
STR WHL POS SIG B 18 LT BLU 1764
YAW RATE SENS SIG 19 DK BLU 716
STR WHL POS SENS 5V REF 27 GRY 1056
STR POS SENS SIG 28 LT BLU 2627 (OR 914)
ELECTRONIC BRAKE CONTROL MODULE (EBCM) (AT LEFT FRONT SIDE OF ENGINE COMPARTMENT, ON FRAME RAIL)
STR POS SENS SIG 28 C2 LT BLU 2627 (OR 914)
ELECTRONIC SUSPENSION CONTROL (ESC) MODULE (IN REAR COMPARTMENT, INSIDE LEFT STORAGE COMPARTMENT)
(IN FORWARD LIGHT HARNESS, 12.5 CM FROM BREAKOUT TO EBCM CONNECTOR)
S106
ORG/BLK
GRY 1
GRY
ORG 3
BLK 2
BRAKE FLUID PRESSURE SENSOR (ON LEFT SIDE OF BRAKE PRESSURE MODULATOR VALVE)
GRY
ORG/BLK
ORG/BLK C
GRY A
LT GRN/BLK B
S108 (IN FORWARD LIGHT HARNESS, 6 CM FROM BREAKOUT TO EBCM CONNECTOR)
LATERAL ACCELEROMETER SENSOR (UNDER RIGHT SEAT)
GRY
GRY
S310 (IN DASH HARNESS, 11 CM FROM YAW RATE SENSOR CONNECTOR)
GRY A
ORG/BLK B
S308
DK BLU C
(IN DASH HARNESS, 19 CM FROM YAW RATE SENSOR CONNECTOR)
YAW RATE SENSOR (UNDER HVAC CONTROL HEAD)
ORG/BLK 2
LT GRN 5
GRY 1
LT BLU 6
STEERING WHEEL POSITION SENSOR (AT BASE OF STEERING COLUMN)
BLK
BLK/WHT
G103 (ON LEFT FRAME RAIL, NEAR BRAKE PRESSURE MODULATOR VALVE)
G108 (ON FRAME RAIL, BELOW BATTERY TRAY)
185870

Fig. 10: Electronic Power Steering Circuit

ELECTRONIC SUSPENSION

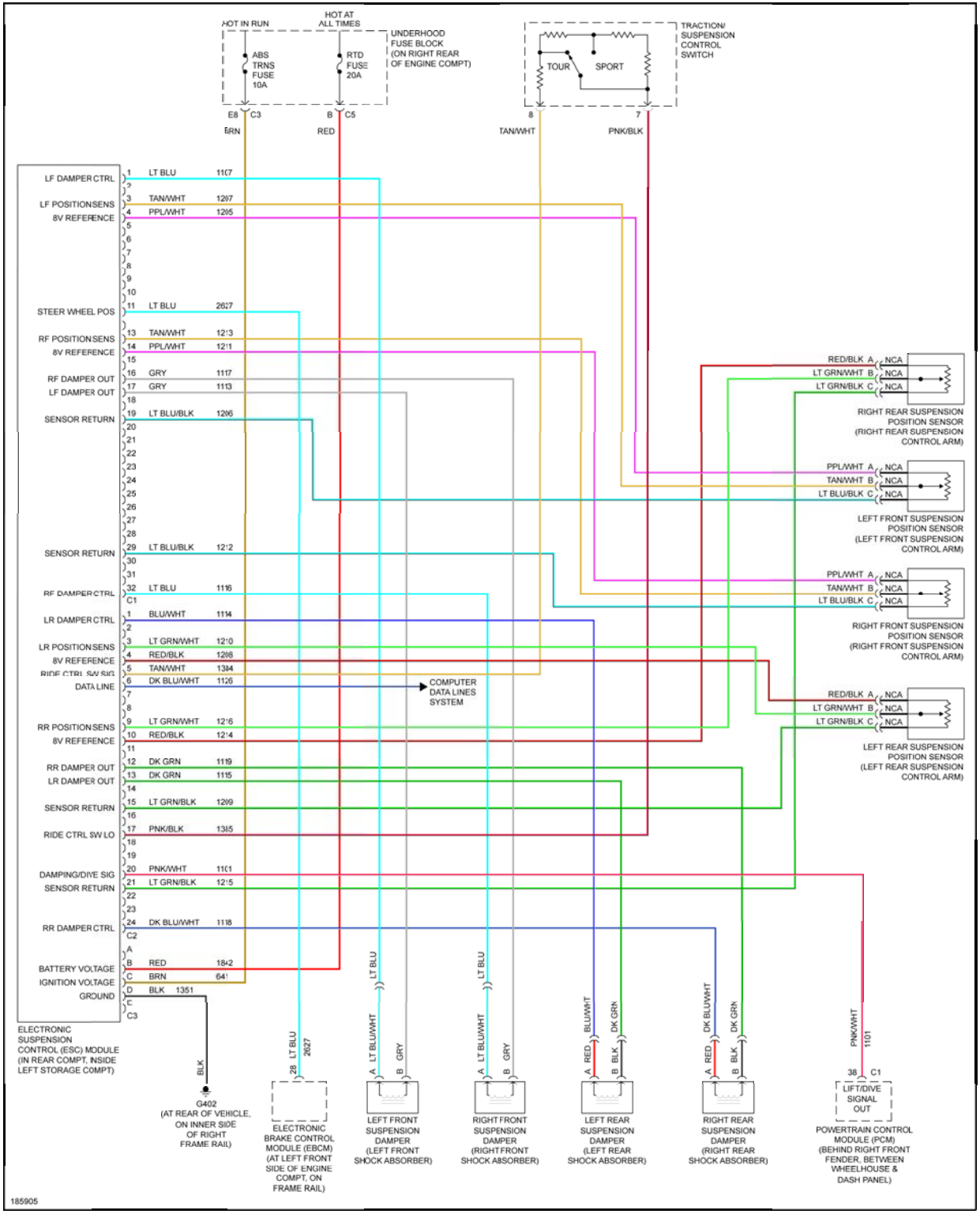
HOT IN RUN
HOT AT ALL TIMES
ABS TRNS FUSE 10A
RTD FUSE 20A
UNDERHOOD FUSE BLOCK (ON RIGHT REAR OF ENGINE COMPT)
TRACTION/ SUSPENSION CONTROL SWITCH
TOUR
SPORT
E8 C3
B C5
8
7
BRN
RED
TAN/WHT
PNK/BLK
LF DAMPER CTRL
LF POSITION SENS
8V REFERENCE
STEER WHEEL POS
RF POSITION SENS
8V REFERENCE
RF DAMPER OUT
LF DAMPER OUT
SENSOR RETURN
SENSOR RETURN
RF DAMPER CTRL
LR DAMPER CTRL
LR POSITION SENS
8V REFERENCE
RIDE CTRL SW SIG
DATA LINE
RR POSITION SENS
8V REFERENCE
RR DAMPER OUT
LR DAMPER OUT
SENSOR RETURN
RIDE CTRL SW LO
DAMPING/DIVE SIG
SENSOR RETURN
RR DAMPER CTRL
BATTERY VOLTAGE
IGNITION VOLTAGE
GROUND
1 LT BLU 1107
3 TAN/WHT 1207
4 PPL/WHT 1205
11 LT BLU 2627
13 TAN/WHT 1213
14 PPL/WHT 1211
16 GRY 1117
17 GRY 1113
19 LT BLU/BLK 1206
29 LT BLU/BLK 1212
32 LT BLU 1116
C1
1 BLU/WHT 1114
3 LT GRN/WHT 1210
4 RED/BLK 1208
5 TAN/WHT 1384
6 DK BLU/WHT 1126
9 LT GRN/WHT 1216
10 RED/BLK 1214
12 DK GRN 1119
13 DK GRN 1115
15 LT GRN/BLK 1209
17 PNK/BLK 1365
20 PNK/WHT 1101
21 LT GRN/BLK 1215
24 DK BLU/WHT 1118
C2
B RED 1842
C BRN 641
D BLK 1351
C3
ELECTRONIC SUSPENSION CONTROL (ESC) MODULE (IN REAR COMPT, INSIDE LEFT STORAGE COMPT)
COMPUTER DATA LINES SYSTEM
RED/BLK A NCA
LT GRN/WHT B NCA
LT GRN/BLK C NCA
RIGHT REAR SUSPENSION POSITION SENSOR (RIGHT REAR SUSPENSION CONTROL ARM)
PPL/WHT A NCA
TAN/WHT B NCA
LT BLU/BLK C NCA
LEFT FRONT SUSPENSION POSITION SENSOR (LEFT FRONT SUSPENSION CONTROL ARM)
PPL/WHT A NCA
TAN/WHT B NCA
LT BLU/BLK C NCA
RIGHT FRONT SUSPENSION POSITION SENSOR (RIGHT FRONT SUSPENSION CONTROL ARM)
RED/BLK A NCA
LT GRN/WHT B NCA
LT GRN/BLK C NCA
LEFT REAR SUSPENSION POSITION SENSOR (LEFT REAR SUSPENSION CONTROL ARM)
BLK
G402 (AT REAR OF VEHICLE, ON INNER SIDE OF RIGHT FRAME RAIL)
28 LT BLU 2627
ELECTRONIC BRAKE CONTROL MODULE (EBCM) (AT LEFT FRONT SIDE OF ENGINE COMPT, ON FRAME RAIL)
A LT BLU/WHT
B GRY
LT BLU
LEFT FRONT SUSPENSION DAMPER (LEFT FRONT SHOCK ABSORBER)
A LT BLU/WHT
B GRY
LT BLU
RIGHT FRONT SUSPENSION DAMPER (RIGHT FRONT SHOCK ABSORBER)
A RED
B BLK
BLU/WHT
DK GRN
LEFT REAR SUSPENSION DAMPER (LEFT REAR SHOCK ABSORBER)
A RED
B BLK
DK BLU/WHT
DK GRN
RIGHT REAR SUSPENSION DAMPER (RIGHT REAR SHOCK ABSORBER)
PNK/WHT 1101
38 C1
LIFT/DIVE SIGNAL OUT
POWERTRAIN CONTROL MODULE (PCM) (BEHIND RIGHT FRONT FENDER, BETWEEN WHEELHOUSE & DASH PANEL)
185905

Fig. 11: Electronic Suspension Circuit

ENGINE PERFORMANCE

5.7L VIN G

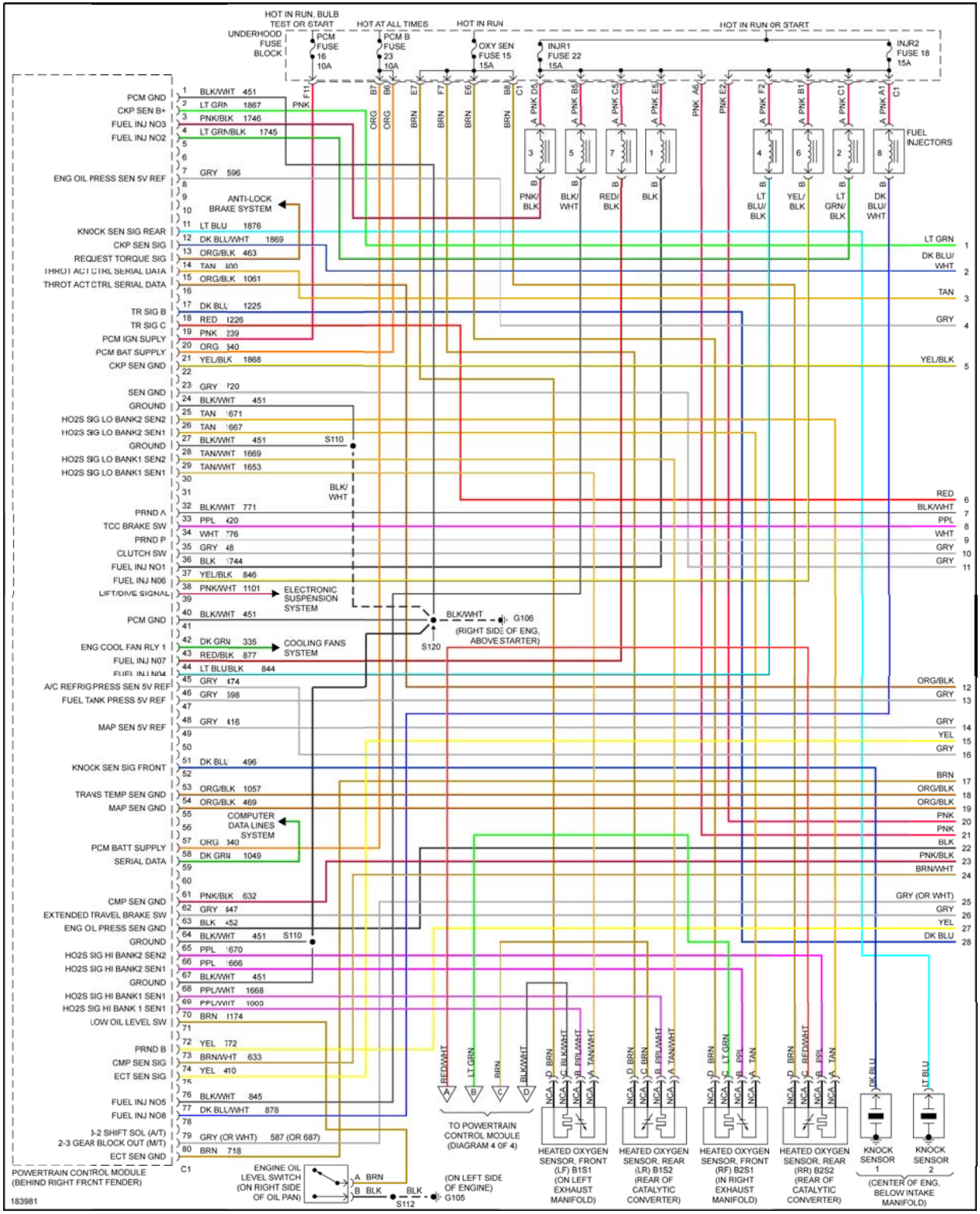
HOT IN RUN, BULB TEST OR START
HOT AT ALL TIMES
HOT IN RUN
HOT IN RUN OR START
UNDERHOOD FUSE BLOCK
PCM FUSE 16 10A
PCM B FUSE 23 10A
OXY SEN FUSE 15 15A
INJR1 FUSE 22 15A
INJR2 FUSE 18 15A
FUEL INJECTORS
PCM GND
CKP SEN B+
FUEL INJ NO3
FUEL INJ NO2
ENG OIL PRESS SEN 5V REF
ANTI-LOCK BRAKE SYSTEM
KNOCK SEN SIG REAR
CKP SEN SIG
REQUEST TORQUE SIG
THROT ACT CTRL SERIAL DATA
TR SIG B
TR SIG C
PCM IGN SUPLY
PCM BAT SUPPLY
CKP SEN GND
SEN GND
GROUND
HO2S SIG LO BANK2 SEN2
HO2S SIG LO BANK2 SEN1
HO2S SIG LO BANK1 SEN2
HO2S SIG LO BANK1 SEN1
PRND A
TCC BRAKE SW
PRND P
CLUTCH SW
FUEL INJ NO1
FUEL INJ NO6
LIFT/DIVE SIGNAL
ELECTRONIC SUSPENSION SYSTEM
ENG COOL FAN RLY 1
COOLING FANS SYSTEM
FUEL INJ NO7
FUEL INJ NO4
A/C REFRIG PRESS SEN 5V REF
FUEL TANK PRESS 5V REF
MAP SEN 5V REF
KNOCK SEN SIG FRONT
TRANS TEMP SEN GND
MAP SEN GND
COMPUTER DATA LINES SYSTEM
PCM BATT SUPPLY
SERIAL DATA
CMP SEN GND
EXTENDED TRAVEL BRAKE SW
ENG OIL PRESS SEN GND
HO2S SIG HI BANK2 SEN2
HO2S SIG HI BANK2 SEN1
HO2S SIG HI BANK1 SEN1
HO2S SIG HI BANK 1 SEN1
LOW OIL LEVEL SW
PRND B
CMP SEN SIG
ECT SEN SIG
FUEL INJ NO5
FUEL INJ NO8
3-2 SHIFT SOL (A/T)
2-3 GEAR BLOCK OUT (M/T)
ECT SEN GND
POWERTRAIN CONTROL MODULE (BEHIND RIGHT FRONT FENDER)
C1
S110
S120
G106
(RIGHT SIDE OF ENG, ABOVE STARTER)
TO POWERTRAIN CONTROL MODULE (DIAGRAM 4 OF 4)
HEATED OXYGEN SENSOR, FRONT (LF) B1S1 (ON LEFT EXHAUST MANIFOLD)
HEATED OXYGEN SENSOR, REAR (LR) B1S2 (REAR OF CATALYTIC CONVERTER)
HEATED OXYGEN SENSOR, FRONT (RF) B2S1 (IN RIGHT EXHAUST MANIFOLD)
HEATED OXYGEN SENSOR, REAR (RR) B2S2 (REAR OF CATALYTIC CONVERTER)
KNOCK SENSOR 1
KNOCK SENSOR 2
(CENTER OF ENG, BELOW INTAKE MANIFOLD)
ENGINE OIL LEVEL SWITCH (ON RIGHT SIDE OF OIL PAN)
S112
G105
(ON LEFT SIDE OF ENGINE)
183981

Fig. 12: 5.7L VIN G, Engine Performance Circuit (1 of 4)

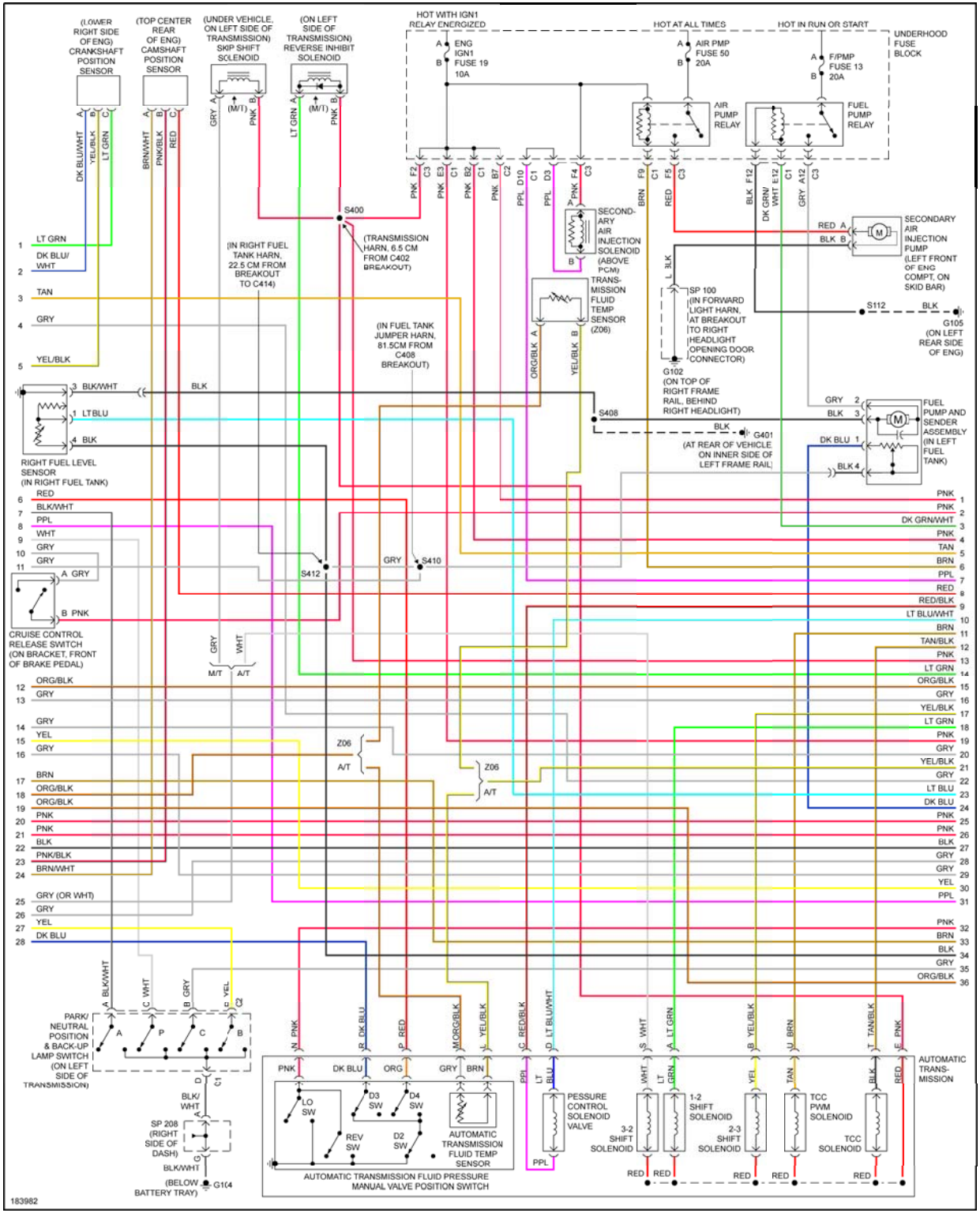
(LOWER RIGHT SIDE OF ENG) CRANKSHAFT POSITION SENSOR
(TOP CENTER REAR OF ENG) CAMSHAFT POSITION SENSOR
(UNDER VEHICLE, ON LEFT SIDE OF TRANSMISSION) SKIP SHIFT SOLENOID
(ON LEFT SIDE OF TRANSMISSION) REVERSE INHIBIT SOLENOID
HOT WITH IGN1 RELAY ENERGIZED
HOT AT ALL TIMES
HOT IN RUN OR START
UNDERHOOD FUSE BLOCK
ENG IGN1 FUSE 19 10A
AIR PMP FUSE 50 20A
F/PMP FUSE 13 20A
AIR PUMP RELAY
FUEL PUMP RELAY
SECONDARY AIR INJECTION SOLENOID (ABOVE PCM)
SECONDARY AIR INJECTION PUMP (LEFT FRONT OF ENG COMPT, ON SKID BAR)
(TRANSMISSION HARN, 6.5 CM FROM C402 BREAKOUT)
(IN RIGHT FUEL TANK HARN, 22.5 CM FROM BREAKOUT TO C414)
(IN FUEL TANK JUMPER HARN, 81.5CM FROM C408 BREAKOUT)
TRANS-MISSION FLUID TEMP SENSOR (Z06)
SP 100 (IN FORWARD LIGHT HARN, AT BREAKOUT TO RIGHT HEADLIGHT OPENING DOOR CONNECTOR)
G102 (ON TOP OF RIGHT FRAME RAIL, BEHIND RIGHT HEADLIGHT)
G105 (ON LEFT REAR SIDE OF ENG)
G401 (AT REAR OF VEHICLE ON INNER SIDE OF LEFT FRAME RAIL)
FUEL PUMP AND SENDER ASSEMBLY (IN LEFT FUEL TANK)
RIGHT FUEL LEVEL SENSOR (IN RIGHT FUEL TANK)
CRUISE CONTROL RELEASE SWITCH (ON BRACKET, FRONT OF BRAKE PEDAL)
PARK/ NEUTRAL POSITION & BACK-UP LAMP SWITCH (ON LEFT SIDE OF TRANSMISSION)
SP 208 (RIGHT SIDE OF DASH)
G1(4 (BELOW BATTERY TRAY)
AUTOMATIC TRANSMISSION FLUID PRESSURE MANUAL VALVE POSITION SWITCH
AUTOMATIC TRANSMISSION FLUID TEMP SENSOR
PESSURE CONTROL SOLENOID VALVE
3-2 SHIFT SOLENOID
1-2 SHIFT SOLENOID
2-3 SHIFT SOLENOID
TCC PWM SOLENOID
TCC SOLENOID
AUTOMATIC TRANS-MISSION
183982

Fig. 13: 5.7L VIN G, Engine Performance Circuit (2 of 4)

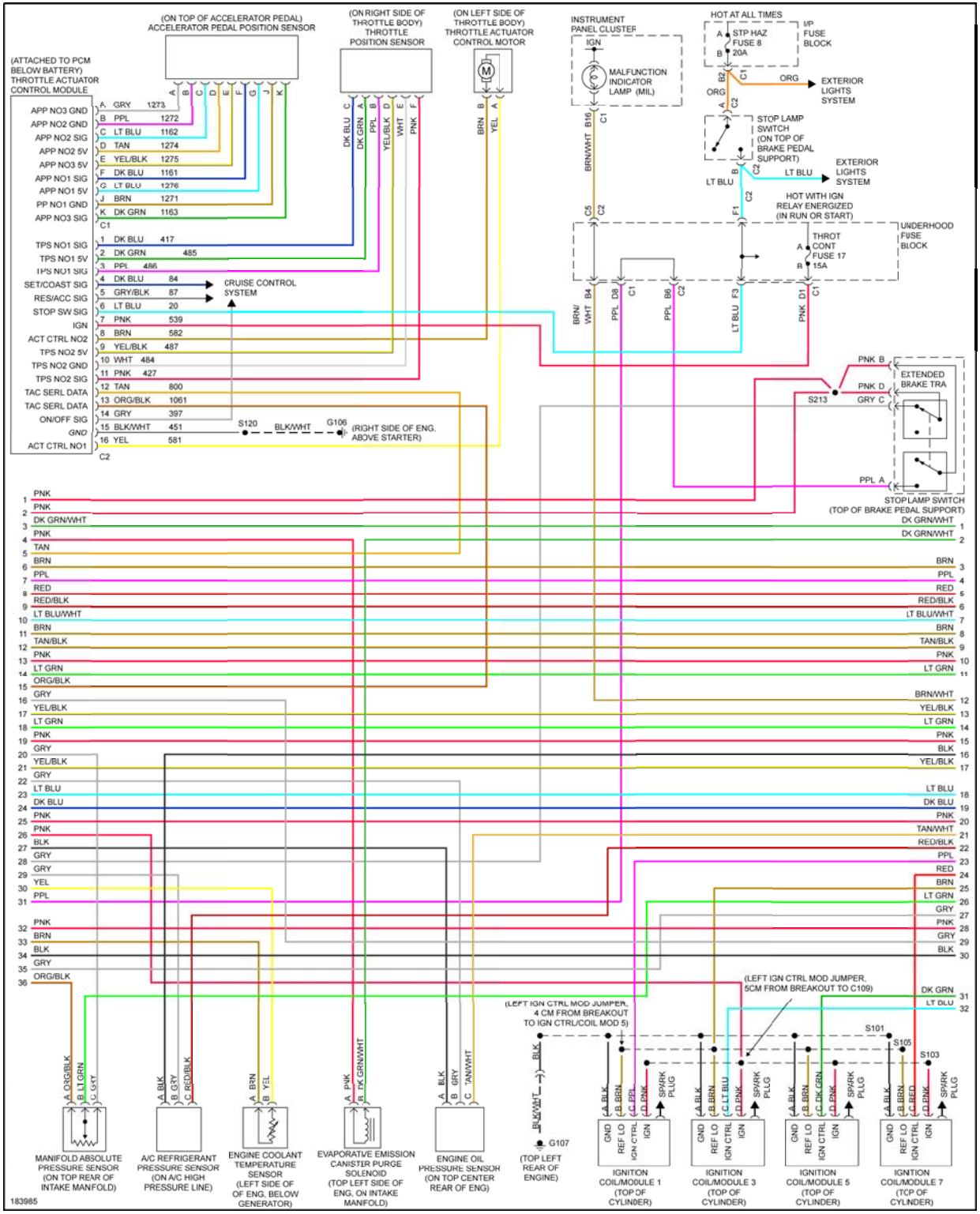
(ON TOP OF ACCELERATOR PEDAL)
ACCELERATOR PEDAL POSITION SENSOR
(ON RIGHT SIDE OF THROTTLE BODY)
THROTTLE POSITION SENSOR
(ON LEFT SIDE OF THROTTLE BODY)
THROTTLE ACTUATOR CONTROL MOTOR
INSTRUMENT PANEL CLUSTER
IGN
MALFUNCTION INDICATOR LAMP (MIL)
HOT AT ALL TIMES
STP HAZ FUSE 8 20A
I/P FUSE BLOCK
ORG
EXTERIOR LIGHTS SYSTEM
STOP LAMP SWITCH (ON TOP OF BRAKE PEDAL SUPPORT)
LT BLU
HOT WITH IGN RELAY ENERGIZED (IN RUN OR START)
UNDERHOOD FUSE BLOCK
THROT CONT FUSE 17 15A
(ATTACHED TO PCM BELOW BATTERY)
THROTTLE ACTUATOR CONTROL MODULE
APP NO3 GND
APP NO2 GND
APP NO2 SIG
APP NO2 5V
APP NO3 5V
APP NO1 SIG
APP NO1 5V
PP NO1 GND
APP NO3 SIG
TPS NO1 SIG
TPS NO1 5V
TPS NO1 SIG
SET/COAST SIG
RES/ACC SIG
STOP SW SIG
IGN
ACT CTRL NO2
TPS NO2 5V
TPS NO2 GND
TPS NO2 SIG
TAC SERL DATA
TAC SERL DATA
ON/OFF SIG
GND
ACT CTRL NO1
CRUISE CONTROL SYSTEM
S120
BLK/WHT
G106
(RIGHT SIDE OF ENG. ABOVE STARTER)
EXTENDED BRAKE TRA
S213
STOP LAMP SWITCH (TOP OF BRAKE PEDAL SUPPORT)
(LEFT IGN CTRL MOD JUMPER, 4 CM FROM BREAKOUT TO IGN CTRL/COIL MOD 5)
(LEFT IGN CTRL MOD JUMPER, 5CM FROM BREAKOUT TO C109)
S101
S105
S103
G107
(TOP LEFT REAR OF ENGINE)
MANIFOLD ABSOLUTE PRESSURE SENSOR (ON TOP REAR OF INTAKE MANFOLD)
A/C REFRIGERANT PRESSURE SENSOR (ON A/C HIGH PRESSURE LINE)
ENGINE COOLANT TEMPERATURE SENSOR (LEFT SIDE OF OF ENG. BELOW GENERATOR)
EVAPORATIVE EMISSION CANISTER PURGE SOLENOID (TOP LEFT SIDE OF ENG. ON INTAKE MANIFOLD)
ENGINE OIL PRESSURE SENSOR (ON TOP CENTER REAR OF ENG)
IGNITION COIL/MODULE 1 (TOP OF CYLINDER)
IGNITION COIL/MODULE 3 (TOP OF CYLINDER)
IGNITION COIL/MODULE 5 (TOP OF CYLINDER)
IGNTION COIL/MODULE 7 (TOP OF CYLINDER)
183985

Fig. 14: 5.7L VIN G, Engine Performance Circuit (3 of 4)

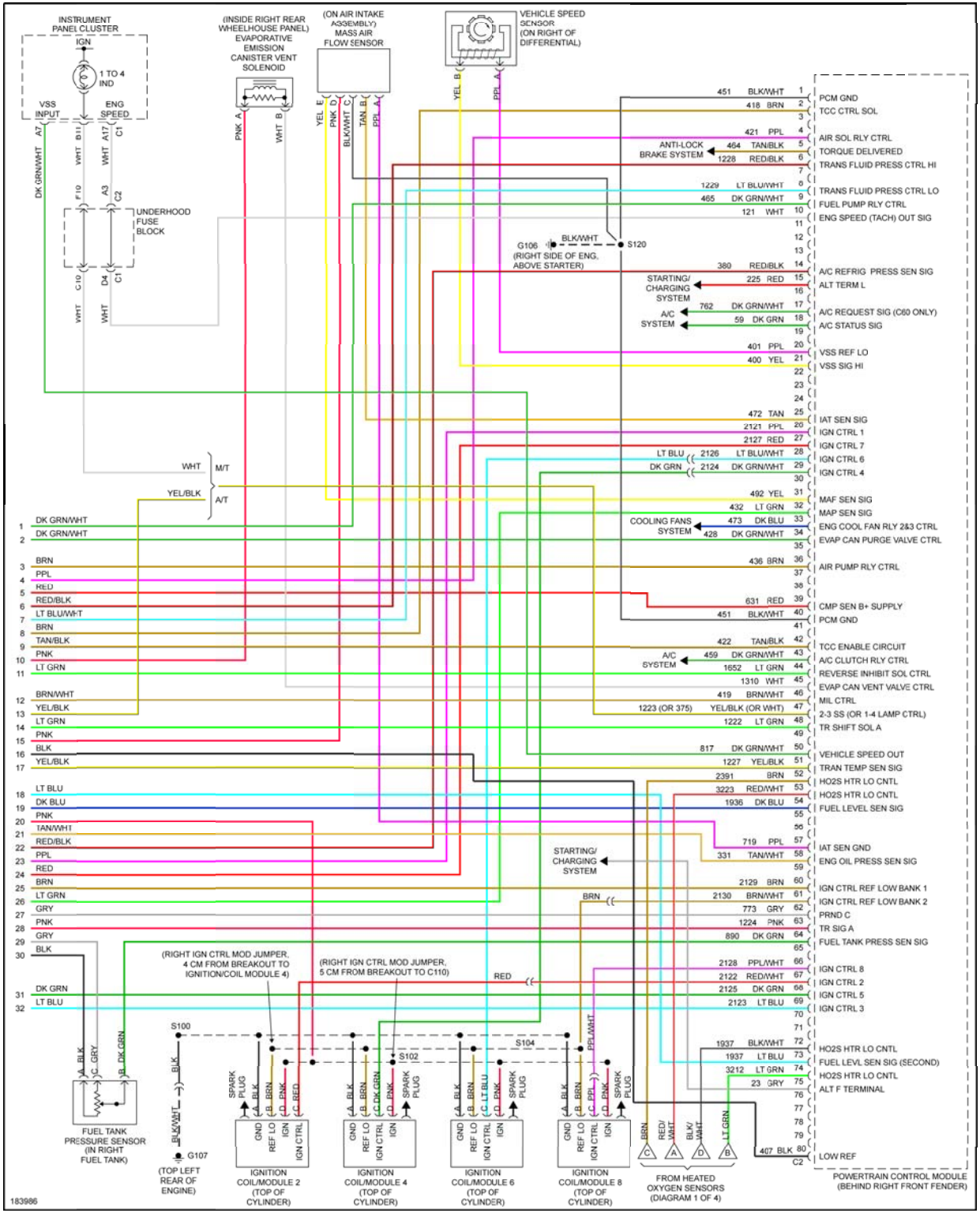
INSTRUMENT PANEL CLUSTER
IGN
1 TO 4 IND
VSS INPUT
ENG SPEED
(INSIDE RIGHT REAR WHEELHOUSE PANEL) EVAPORATIVE EMISSION CANISTER VENT SOLENOID
(ON AIR INTAKE ASSEMBLY) MASS AIR FLOW SENSOR
VEHICLE SPEED SENSOR (ON RIGHT OF DIFFERENTIAL)
UNDERHOOD FUSE BLOCK
G106 (RIGHT SIDE OF ENG, ABOVE STARTER)
S120
ANTI-LOCK BRAKE SYSTEM
STARTING/ CHARGING SYSTEM
A/C SYSTEM
COOLING FANS SYSTEM
M/T
A/T
PCM GND
TCC CTRL SOL
AIR SOL RLY CTRL
TORQUE DELIVERED
TRANS FLUID PRESS CTRL HI
TRANS FLUID PRESS CTRL LO
FUEL PUMP RLY CTRL
ENG SPEED (TACH) OUT SIG
A/C REFRIG PRESS SEN SIG
ALT TERM L
A/C REQUEST SIG (C60 ONLY)
A/C STATUS SIG
VSS REF LO
VSS SIG HI
IAT SEN SIG
IGN CTRL 1
IGN CTRL 7
IGN CTRL 6
IGN CTRL 4
MAF SEN SIG
MAP SEN SIG
ENG COOL FAN RLY 2&3 CTRL
EVAP CAN PURGE VALVE CTRL
AIR PUMP RLY CTRL
CMP SEN B+ SUPPLY
PCM GND
TCC ENABLE CIRCUIT
A/C CLUTCH RLY CTRL
REVERSE INHIBIT SOL CTRL
EVAP CAN VENT VALVE CTRL
MIL CTRL
2-3 SS (OR 1-4 LAMP CTRL)
TR SHIFT SOL A
VEHICLE SPEED OUT
TRAN TEMP SEN SIG
HO2S HTR LO CNTL
HO2S HTR LO CNTL
FUEL LEVEL SEN SIG
IAT SEN GND
ENG OIL PRESS SEN SIG
IGN CTRL REF LOW BANK 1
IGN CTRL REF LOW BANK 2
PRND C
TR SIG A
FUEL TANK PRESS SEN SIG
IGN CTRL 8
IGN CTRL 2
IGN CTRL 5
IGN CTRL 3
HO2S HTR LO CNTL
FUEL LEVL SEN SIG (SECOND)
HO2S HTR LO CNTL
ALT F TERMINAL
LOW REF
(RIGHT IGN CTRL MOD JUMPER, 4 CM FROM BREAKOUT TO IGNITION/COIL MODULE 4)
(RIGHT IGN CTRL MOD JUMPER, 5 CM FROM BREAKOUT TO C110)
S100
S102
S104
G107 (TOP LEFT REAR OF ENGINE)
FUEL TANK PRESSURE SENSOR (IN RIGHT FUEL TANK)
IGNITION COIL/MODULE 2 (TOP OF CYLINDER)
IGNITION COIL/MODULE 4 (TOP OF CYLINDER)
IGNITION COIL/MODULE 6 (TOP OF CYLINDER)
IGNITION COIL/MODULE 8 (TOP OF CYLINDER)
FROM HEATED OXYGEN SENSORS (DIAGRAM 1 OF 4)
POWERTRAIN CONTROL MODULE (BEHIND RIGHT FRONT FENDER)
183986

Fig. 15: 5.7L VIN G, Engine Performance Circuit (4 of 4)

5.7L VIN S

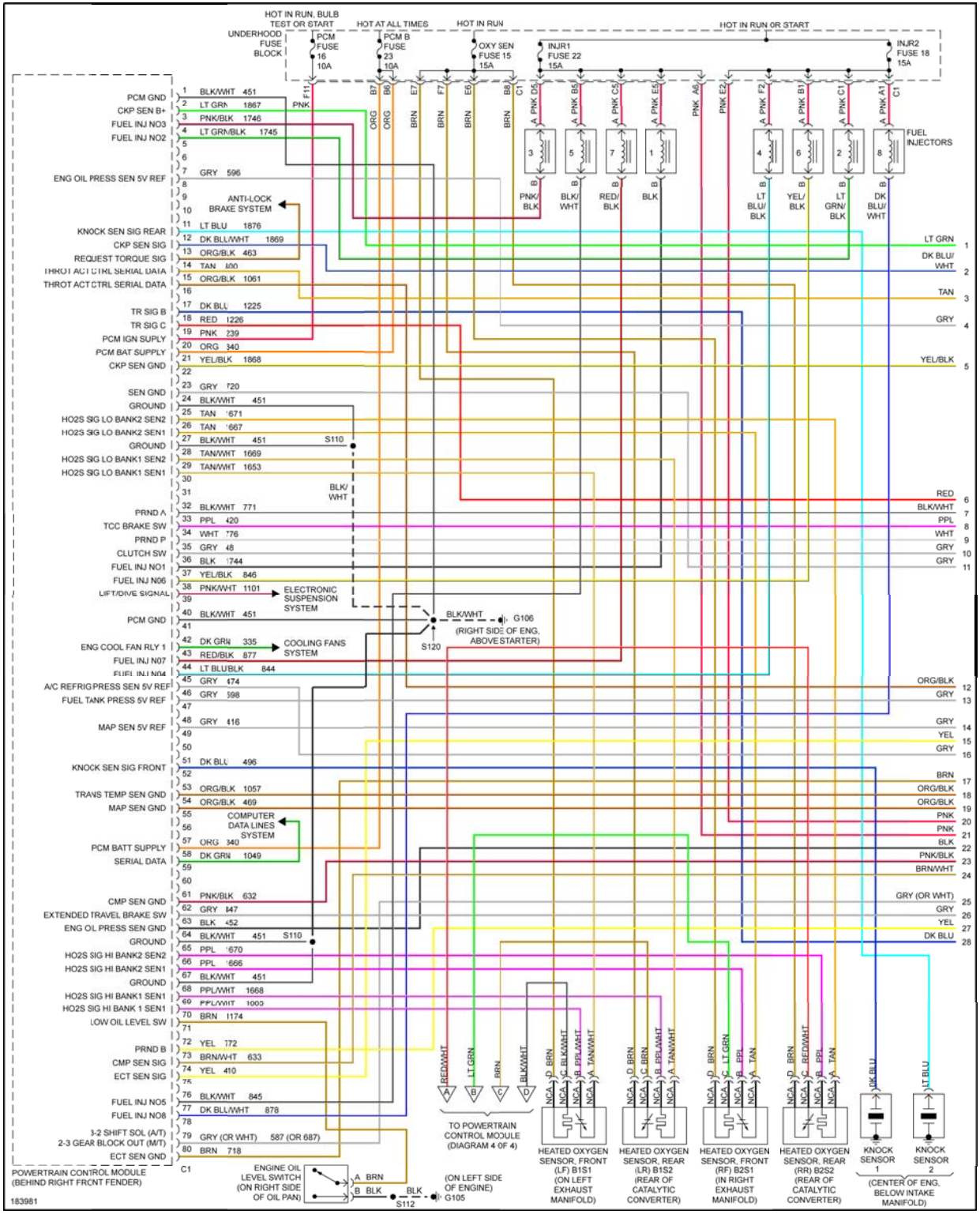
HOT IN RUN, BULB TEST OR START
HOT AT ALL TIMES
HOT IN RUN
HOT IN RUN OR START
UNDERHOOD FUSE BLOCK
PCM FUSE 16 10A
PCM B FUSE 23 10A
OXY SEN FUSE 15 15A
INJR1 FUSE 22 15A
INJR2 FUSE 18 15A
FUEL INJECTORS
PCM GND
CKP SEN B+
FUEL INJ NO3
FUEL INJ NO2
ENG OIL PRESS SEN 5V REF
ANTI-LOCK BRAKE SYSTEM
KNOCK SEN SIG REAR
CKP SEN SIG
REQUEST TORQUE SIG
THROT ACT CTRL SERIAL DATA
TR SIG B
TR SIG C
PCM IGN SUPLY
PCM BAT SUPPLY
CKP SEN GND
SEN GND
GROUND
HO2S SIG LO BANK2 SEN2
HO2S SIG LO BANK2 SEN1
HO2S SIG LO BANK1 SEN2
HO2S SIG LO BANK1 SEN1
PRND A
TCC BRAKE SW
PRND P
CLUTCH SW
FUEL INJ NO1
FUEL INJ NO6
LIFT/DIVE SIGNAL
ELECTRONIC SUSPENSION SYSTEM
ENG COOL FAN RLY 1
COOLING FANS SYSTEM
FUEL INJ NO7
FUEL INJ NO4
A/C REFRIG PRESS SEN 5V REF
FUEL TANK PRESS 5V REF
MAP SEN 5V REF
KNOCK SEN SIG FRONT
TRANS TEMP SEN GND
MAP SEN GND
COMPUTER DATA LINES SYSTEM
PCM BATT SUPPLY
SERIAL DATA
CMP SEN GND
EXTENDED TRAVEL BRAKE SW
ENG OIL PRESS SEN GND
HO2S SIG HI BANK2 SEN2
HO2S SIG HI BANK2 SEN1
HO2S SIG HI BANK1 SEN1
HO2S SIG HI BANK 1 SEN1
LOW OIL LEVEL SW
PRND B
CMP SEN SIG
ECT SEN SIG
FUEL INJ NO5
FUEL INJ NO8
3-2 SHIFT SOL (A/T)
2-3 GEAR BLOCK OUT (M/T)
ECT SEN GND
POWERTRAIN CONTROL MODULE (BEHIND RIGHT FRONT FENDER)
C1
S110
S120
G106
(RIGHT SIDE OF ENG, ABOVE STARTER)
TO POWERTRAIN CONTROL MODULE (DIAGRAM 4 OF 4)
HEATED OXYGEN SENSOR, FRONT (LF) B1S1 (ON LEFT EXHAUST MANIFOLD)
HEATED OXYGEN SENSOR, REAR (LR) B1S2 (REAR OF CATALYTIC CONVERTER)
HEATED OXYGEN SENSOR, FRONT (RF) B2S1 (IN RIGHT EXHAUST MANIFOLD)
HEATED OXYGEN SENSOR, REAR (RR) B2S2 (REAR OF CATALYTIC CONVERTER)
KNOCK SENSOR 1
KNOCK SENSOR 2
(CENTER OF ENG, BELOW INTAKE MANIFOLD)
ENGINE OIL LEVEL SWITCH (ON RIGHT SIDE OF OIL PAN)
S112
G105
(ON LEFT SIDE OF ENGINE)
183981

Fig. 16: 5.7L VIN S, Engine Performance Circuit (1 of 4)

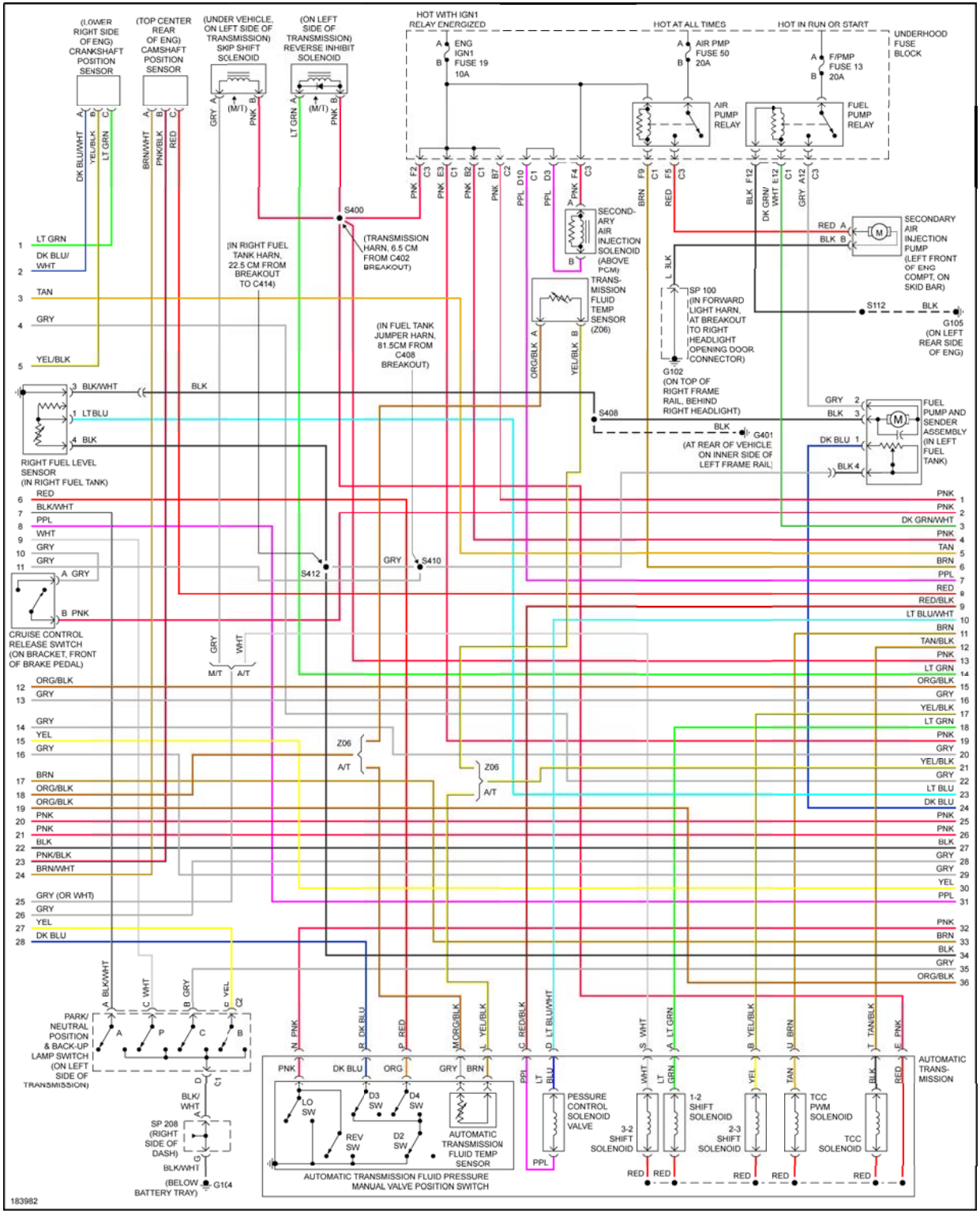
(LOWER RIGHT SIDE OF ENG) CRANKSHAFT POSITION SENSOR
(TOP CENTER REAR OF ENG) CAMSHAFT POSITION SENSOR
(UNDER VEHICLE, ON LEFT SIDE OF TRANSMISSION) SKIP SHIFT SOLENOID
(ON LEFT SIDE OF TRANSMISSION) REVERSE INHIBIT SOLENOID
HOT WITH IGN1 RELAY ENERGIZED
HOT AT ALL TIMES
HOT IN RUN OR START
UNDERHOOD FUSE BLOCK
ENG IGN1 FUSE 19 10A
AIR PMP FUSE 50 20A
F/PMP FUSE 13 20A
AIR PUMP RELAY
FUEL PUMP RELAY
SECONDARY AIR INJECTION SOLENOID (ABOVE PCM)
SECONDARY AIR INJECTION PUMP (LEFT FRONT OF ENG COMPT, ON SKID BAR)
(TRANSMISSION HARN, 6.5 CM FROM C402 BREAKOUT)
(IN RIGHT FUEL TANK HARN, 22.5 CM FROM BREAKOUT TO C414)
(IN FUEL TANK JUMPER HARN, 81.5CM FROM C408 BREAKOUT)
TRANS-MISSION FLUID TEMP SENSOR (Z06)
SP 100 (IN FORWARD LIGHT HARN, AT BREAKOUT TO RIGHT HEADLIGHT OPENING DOOR CONNECTOR)
G102 (ON TOP OF RIGHT FRAME RAIL, BEHIND RIGHT HEADLIGHT)
G105 (ON LEFT REAR SIDE OF ENG)
G401 (AT REAR OF VEHICLE ON INNER SIDE OF LEFT FRAME RAIL)
FUEL PUMP AND SENDER ASSEMBLY (IN LEFT FUEL TANK)
RIGHT FUEL LEVEL SENSOR (IN RIGHT FUEL TANK)
CRUISE CONTROL RELEASE SWITCH (ON BRACKET, FRONT OF BRAKE PEDAL)
PARK/ NEUTRAL POSITION & BACK-UP LAMP SWITCH (ON LEFT SIDE OF TRANSMISSION)
SP 208 (RIGHT SIDE OF DASH)
G1(4 (BELOW BATTERY TRAY)
AUTOMATIC TRANSMISSION FLUID PRESSURE MANUAL VALVE POSITION SWITCH
AUTOMATIC TRANSMISSION FLUID TEMP SENSOR
PESSURE CONTROL SOLENOID VALVE
3-2 SHIFT SOLENOID
1-2 SHIFT SOLENOID
2-3 SHIFT SOLENOID
TCC PWM SOLENOID
TCC SOLENOID
AUTOMATIC TRANS-MISSION
183982

Fig. 17: 5.7L VIN S, Engine Performance Circuit (2 of 4)

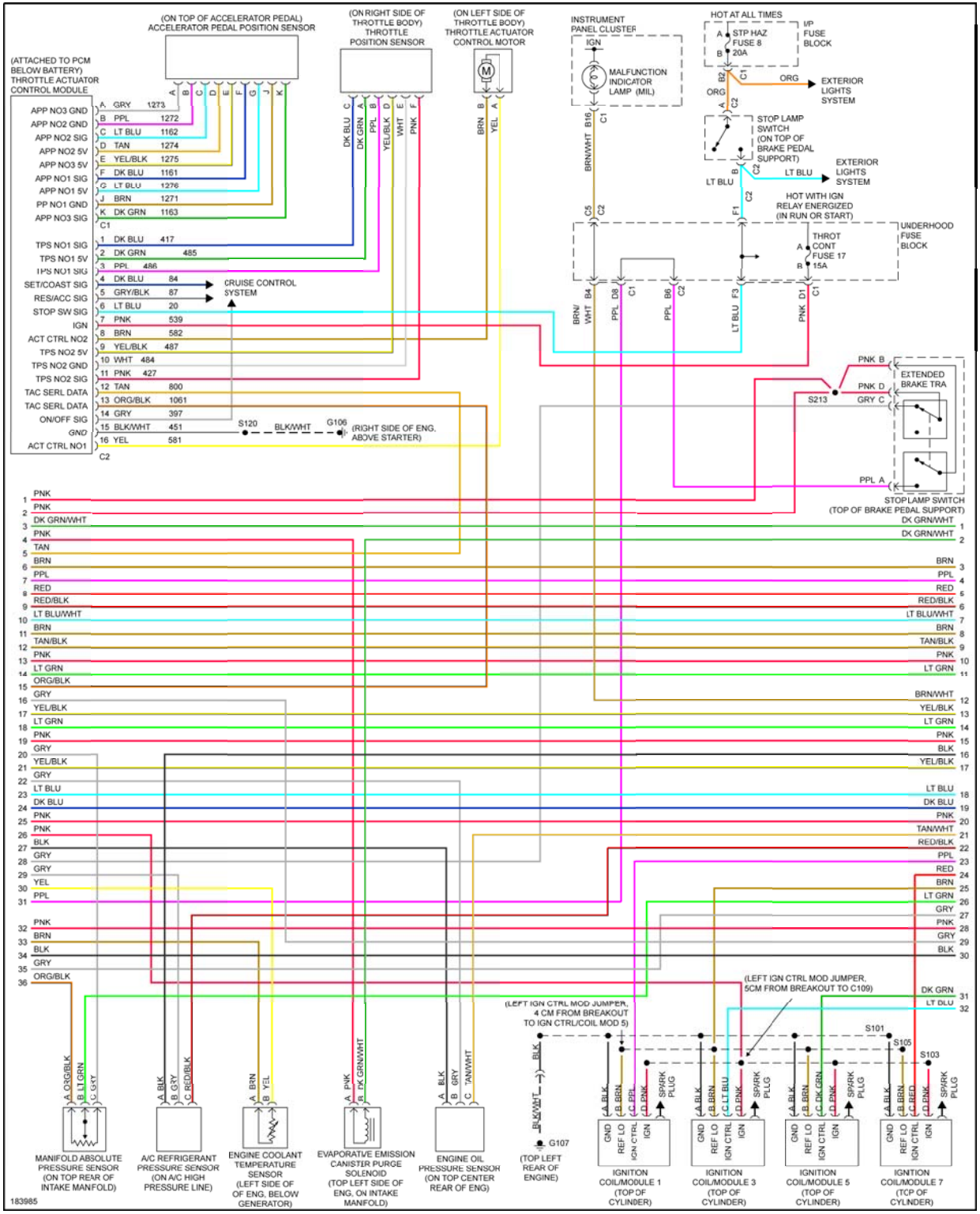
(ON TOP OF ACCELERATOR PEDAL)
ACCELERATOR PEDAL POSITION SENSOR
(ON RIGHT SIDE OF THROTTLE BODY)
THROTTLE POSITION SENSOR
(ON LEFT SIDE OF THROTTLE BODY)
THROTTLE ACTUATOR CONTROL MOTOR
INSTRUMENT PANEL CLUSTER
IGN
MALFUNCTION INDICATOR LAMP (MIL)
HOT AT ALL TIMES
STP HAZ FUSE 8 20A
I/P FUSE BLOCK
ORG
EXTERIOR LIGHTS SYSTEM
STOP LAMP SWITCH (ON TOP OF BRAKE PEDAL SUPPORT)
LT BLU
HOT WITH IGN RELAY ENERGIZED (IN RUN OR START)
UNDERHOOD FUSE BLOCK
THROT CONT FUSE 17 15A
(ATTACHED TO PCM BELOW BATTERY)
THROTTLE ACTUATOR CONTROL MODULE
APP NO3 GND
APP NO2 GND
APP NO2 SIG
APP NO2 5V
APP NO3 5V
APP NO1 SIG
APP NO1 5V
PP NO1 GND
APP NO3 SIG
TPS NO1 SIG
TPS NO1 5V
TPS NO1 SIG
SET/COAST SIG
RES/ACC SIG
STOP SW SIG
IGN
ACT CTRL NO2
TPS NO2 5V
TPS NO2 GND
TPS NO2 SIG
TAC SERL DATA
TAC SERL DATA
ON/OFF SIG
GND
ACT CTRL NO1
CRUISE CONTROL SYSTEM
S120
BLK/WHT
G106
(RIGHT SIDE OF ENG. ABOVE STARTER)
EXTENDED BRAKE TRA
S213
STOP LAMP SWITCH (TOP OF BRAKE PEDAL SUPPORT)
(LEFT IGN CTRL MOD JUMPER, 4 CM FROM BREAKOUT TO IGN CTRL/COIL MOD 5)
(LEFT IGN CTRL MOD JUMPER, 5CM FROM BREAKOUT TO C109)
S101
S105
S103
G107
(TOP LEFT REAR OF ENGINE)
MANIFOLD ABSOLUTE PRESSURE SENSOR (ON TOP REAR OF INTAKE MANFOLD)
A/C REFRIGERANT PRESSURE SENSOR (ON A/C HIGH PRESSURE LINE)
ENGINE COOLANT TEMPERATURE SENSOR (LEFT SIDE OF OF ENG. BELOW GENERATOR)
EVAPORATIVE EMISSION CANISTER PURGE SOLENOID (TOP LEFT SIDE OF ENG. ON INTAKE MANIFOLD)
ENGINE OIL PRESSURE SENSOR (ON TOP CENTER REAR OF ENG)
IGNITION COIL/MODULE 1 (TOP OF CYLINDER)
IGNITION COIL/MODULE 3 (TOP OF CYLINDER)
IGNITION COIL/MODULE 5 (TOP OF CYLINDER)
IGNTION COIL/MODULE 7 (TOP OF CYLINDER)
183985

Fig. 18: 5.7L VIN S, Engine Performance Circuit (3 of 4)

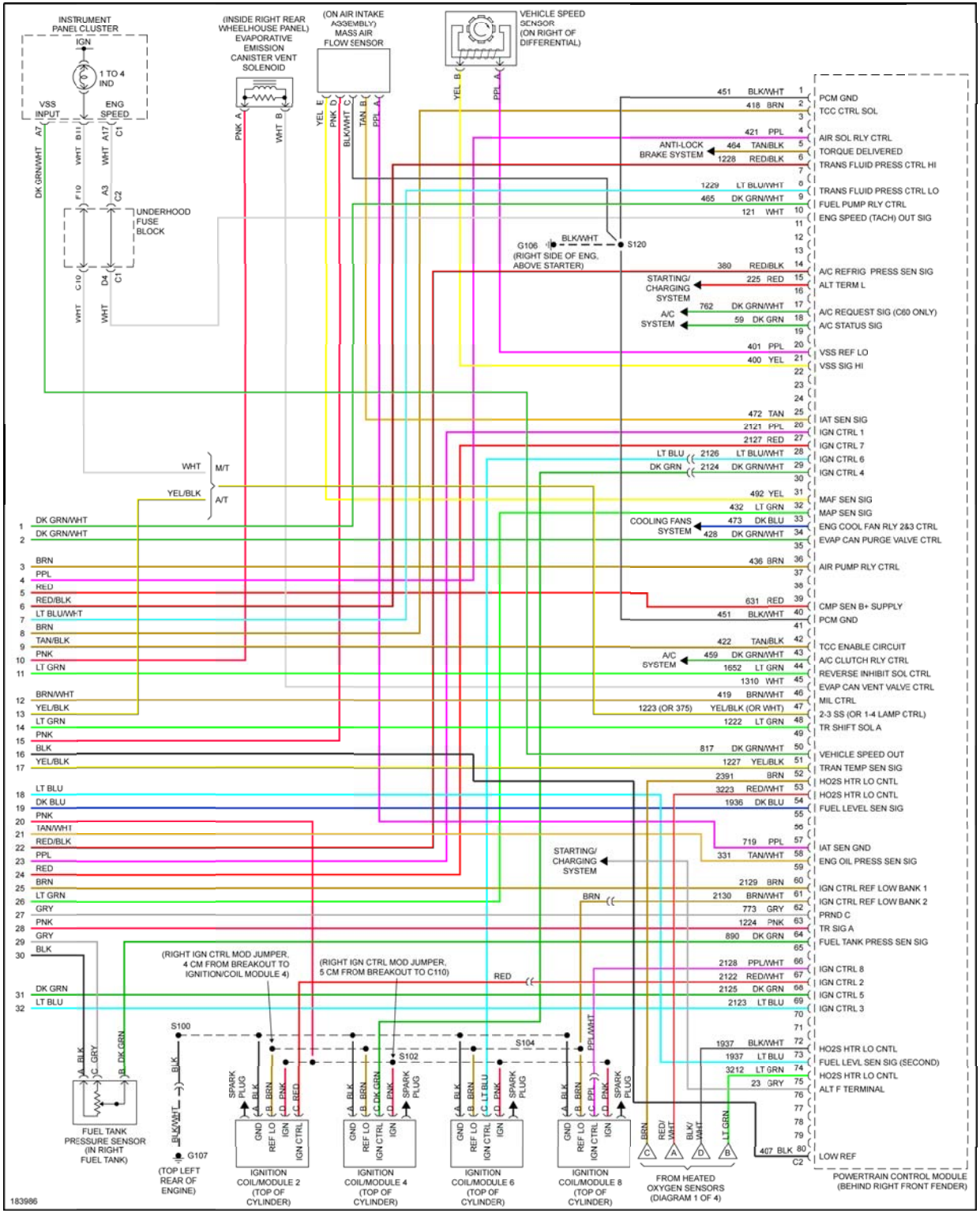
INSTRUMENT PANEL CLUSTER
IGN
1 TO 4 IND
VSS INPUT
ENG SPEED
(INSIDE RIGHT REAR WHEELHOUSE PANEL) EVAPORATIVE EMISSION CANISTER VENT SOLENOID
(ON AIR INTAKE ASSEMBLY) MASS AIR FLOW SENSOR
VEHICLE SPEED SENSOR (ON RIGHT OF DIFFERENTIAL)
UNDERHOOD FUSE BLOCK
G106 (RIGHT SIDE OF ENG, ABOVE STARTER)
S120
ANTI-LOCK BRAKE SYSTEM
STARTING/ CHARGING SYSTEM
A/C SYSTEM
COOLING FANS SYSTEM
M/T
A/T
PCM GND
TCC CTRL SOL
AIR SOL RLY CTRL
TORQUE DELIVERED
TRANS FLUID PRESS CTRL HI
TRANS FLUID PRESS CTRL LO
FUEL PUMP RLY CTRL
ENG SPEED (TACH) OUT SIG
A/C REFRIG PRESS SEN SIG
ALT TERM L
A/C REQUEST SIG (C60 ONLY)
A/C STATUS SIG
VSS REF LO
VSS SIG HI
IAT SEN SIG
IGN CTRL 1
IGN CTRL 7
IGN CTRL 6
IGN CTRL 4
MAF SEN SIG
MAP SEN SIG
ENG COOL FAN RLY 2&3 CTRL
EVAP CAN PURGE VALVE CTRL
AIR PUMP RLY CTRL
CMP SEN B+ SUPPLY
PCM GND
TCC ENABLE CIRCUIT
A/C CLUTCH RLY CTRL
REVERSE INHIBIT SOL CTRL
EVAP CAN VENT VALVE CTRL
MIL CTRL
2-3 SS (OR 1-4 LAMP CTRL)
TR SHIFT SOL A
VEHICLE SPEED OUT
TRAN TEMP SEN SIG
HO2S HTR LO CNTL
HO2S HTR LO CNTL
FUEL LEVEL SEN SIG
IAT SEN GND
ENG OIL PRESS SEN SIG
IGN CTRL REF LOW BANK 1
IGN CTRL REF LOW BANK 2
PRND C
TR SIG A
FUEL TANK PRESS SEN SIG
IGN CTRL 8
IGN CTRL 2
IGN CTRL 5
IGN CTRL 3
HO2S HTR LO CNTL
FUEL LEVL SEN SIG (SECOND)
HO2S HTR LO CNTL
ALT F TERMINAL
LOW REF
(RIGHT IGN CTRL MOD JUMPER, 4 CM FROM BREAKOUT TO IGNITION/COIL MODULE 4)
(RIGHT IGN CTRL MOD JUMPER, 5 CM FROM BREAKOUT TO C110)
S100
S102
S104
G107 (TOP LEFT REAR OF ENGINE)
FUEL TANK PRESSURE SENSOR (IN RIGHT FUEL TANK)
IGNITION COIL/MODULE 2 (TOP OF CYLINDER)
IGNITION COIL/MODULE 4 (TOP OF CYLINDER)
IGNITION COIL/MODULE 6 (TOP OF CYLINDER)
IGNITION COIL/MODULE 8 (TOP OF CYLINDER)
FROM HEATED OXYGEN SENSORS (DIAGRAM 1 OF 4)
POWERTRAIN CONTROL MODULE (BEHIND RIGHT FRONT FENDER)
183986

Fig. 19: 5.7L VIN S, Engine Performance Circuit (4 of 4)

EXTERIOR LIGHTS

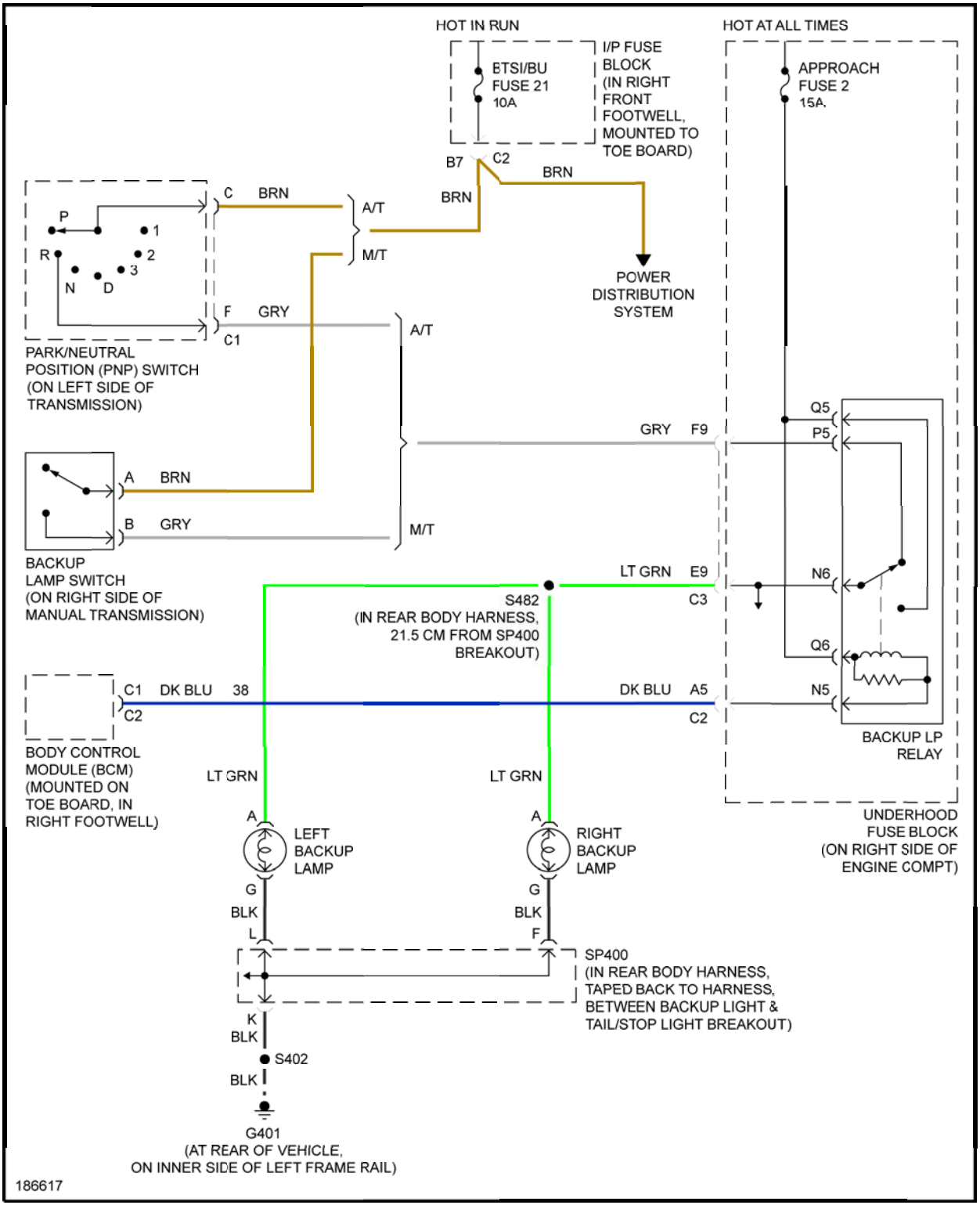
HOT IN RUN
HOT AT ALL TIMES
BTSI/BU
FUSE 21
10A
I/P FUSE
BLOCK
(IN RIGHT
FRONT
FOOTWELL,
MOUNTED TO
TOE BOARD)
APPROACH
FUSE 2
15A
B7
C2
BRN
BRN
BRN
C
A/T
M/T
P
1
R
2
3
N
D
POWER
DISTRIBUTION
SYSTEM
F
GRY
C1
A/T
PARK/NEUTRAL
POSITION (PNP) SWITCH
(ON LEFT SIDE OF
TRANSMISSION)
Q5
P5
GRY
F9
A
BRN
B
GRY
M/T
BACKUP
LAMP SWITCH
(ON RIGHT SIDE OF
MANUAL TRANSMISSION)
LT GRN
E9
N6
S482
(IN REAR BODY HARNESS,
21.5 CM FROM SP400
BREAKOUT)
C3
Q6
C1
DK BLU
38
DK BLU
A5
N5
C2
C2
BACKUP LP
RELAY
BODY CONTROL
MODULE (BCM)
(MOUNTED ON
TOE BOARD, IN
RIGHT FOOTWELL)
LT GRN
LT GRN
UNDERHOOD
FUSE BLOCK
(ON RIGHT SIDE OF
ENGINE COMPT)
A
LEFT
BACKUP
LAMP
A
RIGHT
BACKUP
LAMP
G
BLK
L
G
BLK
F
SP400
(IN REAR BODY HARNESS,
TAPED BACK TO HARNESS,
BETWEEN BACKUP LIGHT &
TAIL/STOP LIGHT BREAKOUT)
K
BLK
S402
BLK
G401
(AT REAR OF VEHICLE,
ON INNER SIDE OF LEFT FRAME RAIL)
186617

Fig. 20: Back-up Lamps Circuit

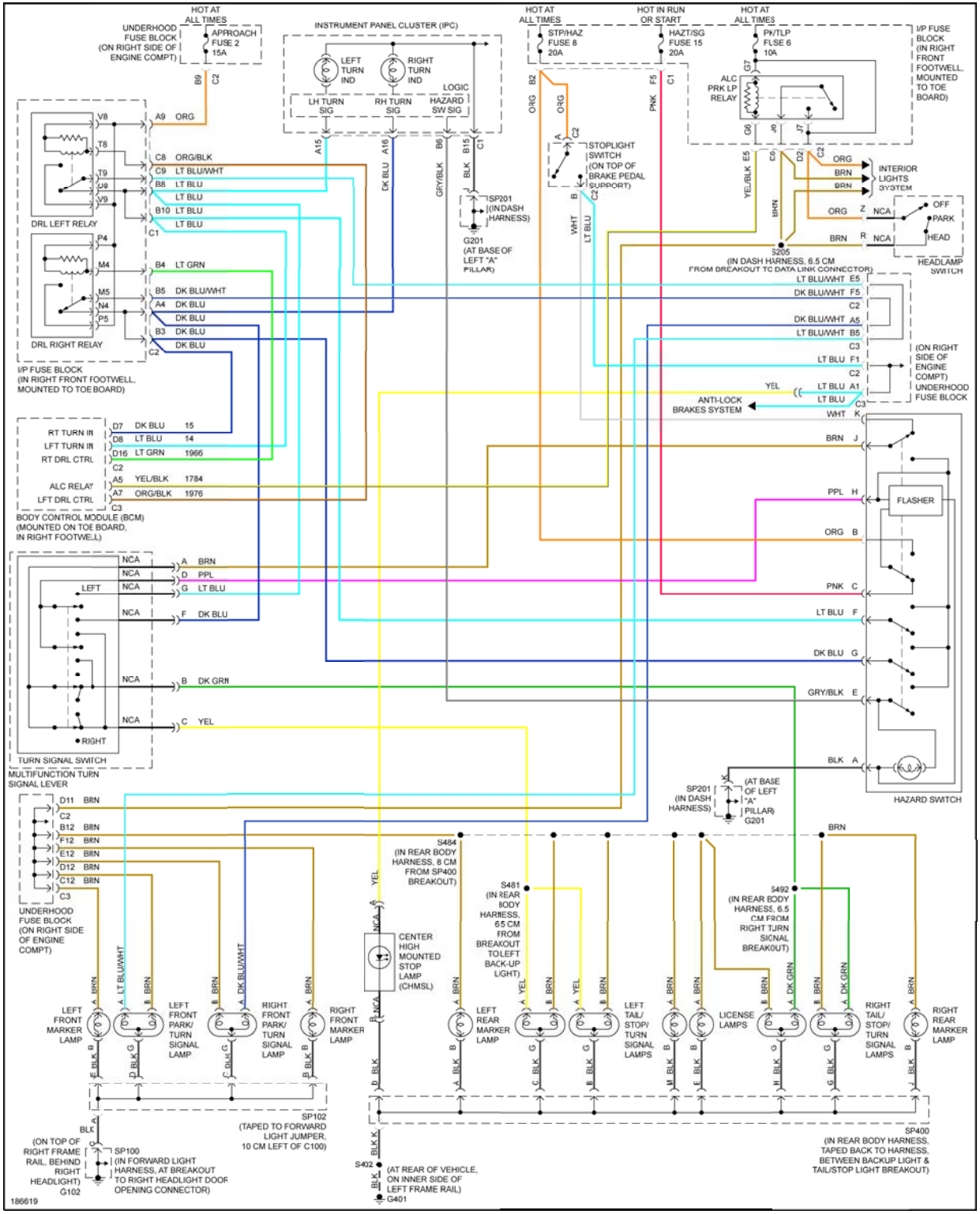
HOT AT ALL TIMES
UNDERHOOD FUSE BLOCK (ON RIGHT SIDE OF ENGINE COMPT)
APPROACH FUSE 2 15A
INSTRUMENT PANEL CLUSTER (IPC)
LEFT TURN IND
RIGHT TURN IND
LOGIC
LH TURN SIG
RH TURN SIG
HAZARD SW SIG
HOT AT ALL TIMES
STP/HAZ FUSE 8 20A
HOT IN RUN OR START
HAZT/SG FUSE 15 20A
HOT AT ALL TIMES
PK/TLP FUSE 6 10A
I/P FUSE BLOCK (IN RIGHT FRONT FOOTWELL, MOUNTED TO TOE BOARD)
ALC PRK LP RELAY
STOPLIGHT SWITCH (ON TOP OF BRAKE PEDAL SUPPORT)
SP201 (IN DASH HARNESS)
G201 (AT BASE OF LEFT "A" PILLAR)
INTERIOR LIGHTS SYSTEM
HEADLAMP SWITCH
OFF
PARK
HEAD
S205 (IN DASH HARNESS, 6.5 CM FROM BREAKOUT TO DATA LINK CONNECTOR)
DRL LEFT RELAY
DRL RIGHT RELAY
I/P FUSE BLOCK (IN RIGHT FRONT FOOTWELL, MOUNTED TO TOE BOARD)
(ON RIGHT SIDE OF ENGINE COMPT) UNDERHOOD FUSE BLOCK
ANTI-LOCK BRAKES SYSTEM
RT TURN IN
LFT TURN IN
RT DRL CTRL
ALC RELAY
LFT DRL CTRL
BODY CONTROL MODULE (BCM) (MOUNTED ON TOE BOARD, IN RIGHT FOOTWELL)
FLASHER
HAZARD SWITCH
LEFT
RIGHT
TURN SIGNAL SWITCH
MULTIFUNCTION TURN SIGNAL LEVER
SP201 (IN DASH HARNESS)
(AT BASE OF LEFT "A" PILLAR) G201
UNDERHOOD FUSE BLOCK (ON RIGHT SIDE OF ENGINE COMPT)
S484 (IN REAR BODY HARNESS, 8 CM FROM SP400 BREAKOUT)
S481 (IN REAR BODY HARNESS, 6.5 CM FROM BREAKOUT TO LEFT BACK-UP LIGHT)
S492 (IN REAR BODY HARNESS, 6.5 CM FROM RIGHT TURN SIGNAL BREAKOUT)
CENTER HIGH MOUNTED STOP LAMP (CHMSL)
LEFT FRONT MARKER LAMP
LEFT FRONT PARK/ TURN SIGNAL LAMP
RIGHT FRONT PARK/ TURN SIGNAL LAMP
RIGHT FRONT MARKER LAMP
LEFT REAR MARKER LAMP
LEFT TAIL/ STOP/ TURN SIGNAL LAMPS
LICENSE LAMPS
RIGHT TAIL/ STOP/ TURN SIGNAL LAMPS
RIGHT REAR MARKER LAMP
SP102 (TAPED TO FORWARD LIGHT JUMPER, 10 CM LEFT OF C100)
SP400 (IN REAR BODY HARNESS, TAPED BACK TO HARNESS, BETWEEN BACKUP LIGHT & TAIL/STOP LIGHT BREAKOUT)
(ON TOP OF RIGHT FRAME RAIL, BEHIND RIGHT HEADLIGHT) G102
SP100 (IN FORWARD LIGHT HARNESS, AT BREAKOUT TO RIGHT HEADLIGHT DOOR OPENING CONNECTOR)
S402
(AT REAR OF VEHICLE, ON INNER SIDE OF LEFT FRAME RAIL) G401
186619

Fig. 21: Exterior Lamps Circuit

GROUND DISTRIBUTION

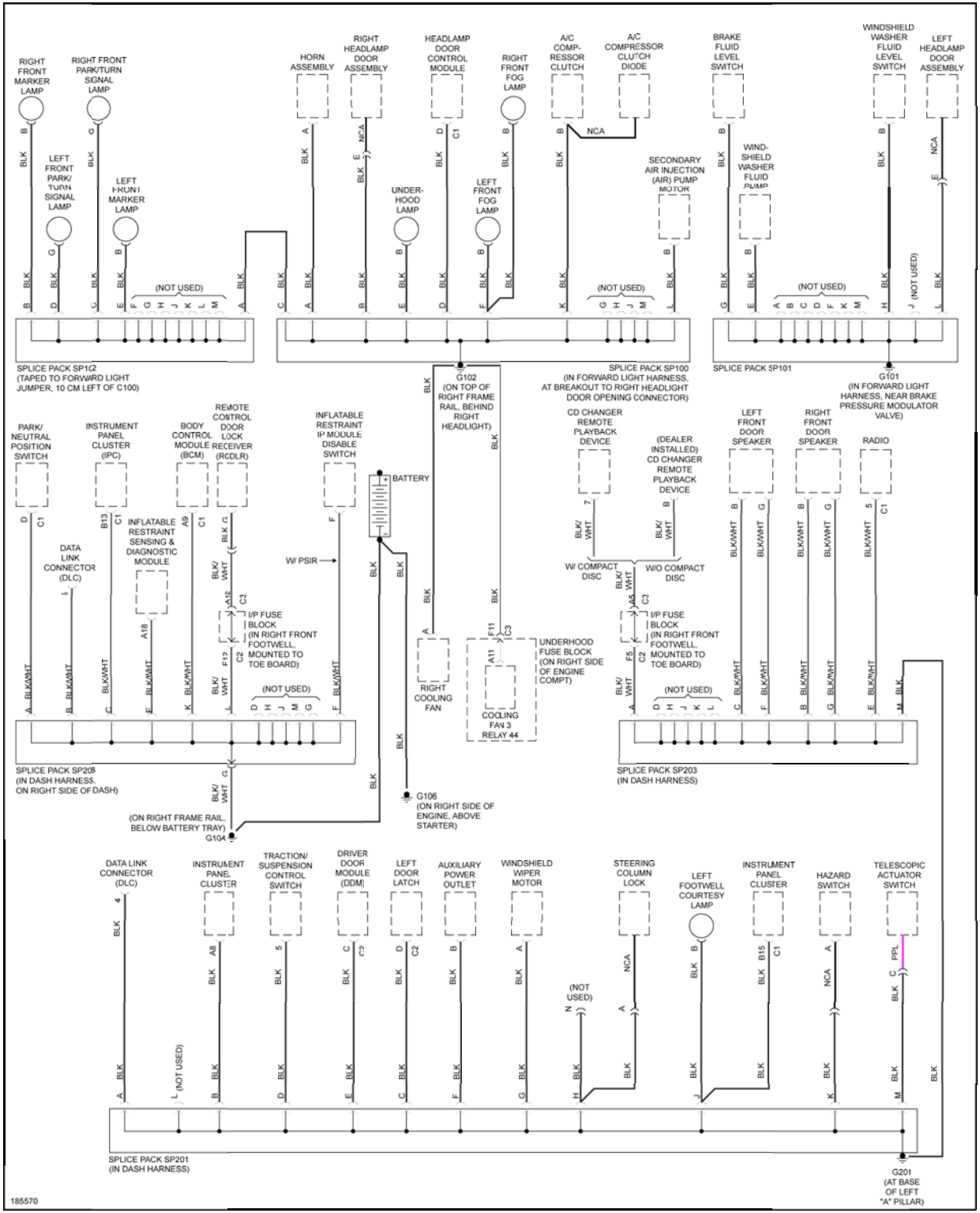
RIGHT FRONT MARKER LAMP
RIGHT FRONT PARK/TURN SIGNAL LAMP
LEFT FRONT PARK/ TURN SIGNAL LAMP
LEFT FRONT MARKER LAMP
HORN ASSEMBLY
RIGHT HEADLAMP DOOR ASSEMBLY
HEADLAMP DOOR CONTROL MODULE
RIGHT FRONT FOG LAMP
A/C COMP-RESSOR CLUTCH
A/C COMPRESSOR CLUTCH DIODE
BRAKE FLUID LEVEL SWITCH
WINDSHIELD WASHER FLUID LEVEL SWITCH
LEFT HEADLAMP DOOR ASSEMBLY
UNDER-HOOD LAMP
LEFT FRONT FOG LAMP
SECONDARY AIR INJECTION (AIR) PUMP MOTOR
WIND-SHIELD WASHER FLUID PUMP
(NOT USED)
SPLICE PACK SP102 (TAPED TO FORWARD LIGHT JUMPER, 10 CM LEFT OF C100)
SPLICE PACK SP100 (IN FORWARD LIGHT HARNESS, AT BREAKOUT TO RIGHT HEADLIGHT DOOR OPENING CONNECTOR)
SPLICE PACK SP101
G102 (ON TOP OF RIGHT FRAME RAIL, BEHIND RIGHT HEADLIGHT)
G101 (IN FORWARD LIGHT HARNESS, NEAR BRAKE PRESSURE MODULATOR VALVE)
PARK/ NEUTRAL POSITION SWITCH
INSTRUMENT PANEL CLUSTER (IPC)
BODY CONTROL MODULE (BCM)
REMOTE CONTROL DOOR LOCK RECEIVER (RCDLR)
INFLATABLE RESTRAINT IP MODULE DISABLE SWITCH
BATTERY
CD CHANGER REMOTE PLAYBACK DEVICE
(DEALER INSTALLED) CD CHANGER REMOTE PLAYBACK DEVICE
LEFT FRONT DOOR SPEAKER
RIGHT FRONT DOOR SPEAKER
RADIO
DATA LINK CONNECTOR (DLC)
INFLATABLE RESTRAINT SENSING & DIAGNOSTIC MODULE
W/ PSIR
I/P FUSE BLOCK (IN RIGHT FRONT FOOTWELL, MOUNTED TO TOE BOARD)
W/ COMPACT DISC
W/O COMPACT DISC
RIGHT COOLING FAN
UNDERHOOD FUSE BLOCK (ON RIGHT SIDE OF ENGINE COMPT)
COOLING FAN 3 RELAY 44
SPLICE PACK SP208 (IN DASH HARNESS, ON RIGHT SIDE OF DASH)
SPLICE PACK SP203 (IN DASH HARNESS)
(ON RIGHT FRAME RAIL, BELOW BATTERY TRAY) G104
G106 (ON RIGHT SIDE OF ENGINE, ABOVE STARTER)
DATA LINK CONNECTOR (DLC)
INSTRUMENT PANEL CLUSTER
TRACTION/ SUSPENSION CONTROL SWITCH
DRIVER DOOR MODULE (DDM)
LEFT DOOR LATCH
AUXILIARY POWER OUTLET
WINDSHIELD WIPER MOTOR
STEERING COLUMN LOCK
LEFT FOOTWELL COURTESY LAMP
INSTRUMENT PANEL CLUSTER
HAZARD SWITCH
TELESCOPIC ACTUATOR SWITCH
SPLICE PACK SP201 (IN DASH HARNESS)
G201 (AT BASE OF LEFT "A" PILLAR)
185570

Fig. 22: Ground Distribution Circuit (1 of 3)

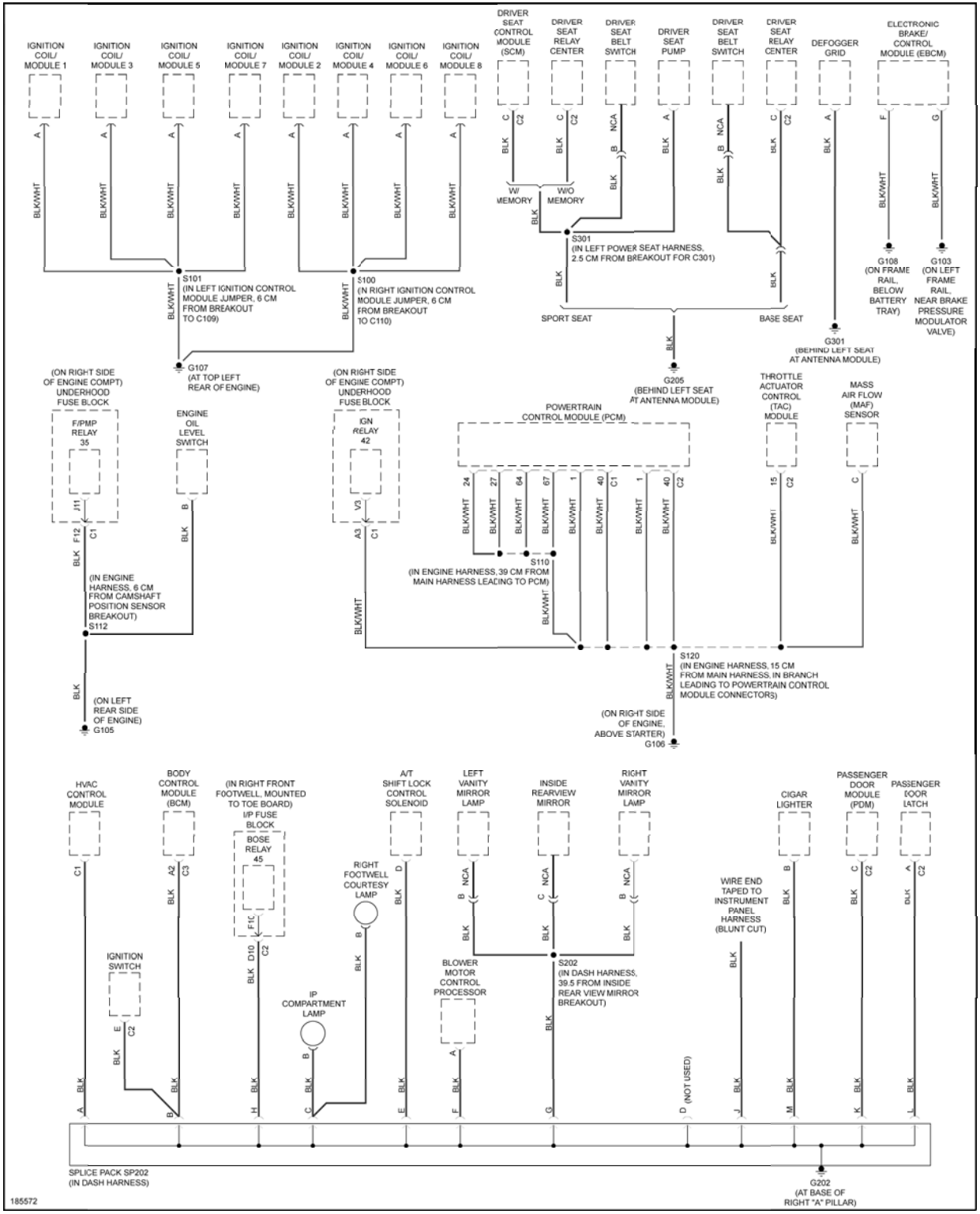
IGNITION COIL/ MODULE 1
IGNITION COIL/ MODULE 3
IGNITION COIL/ MODULE 5
IGNITION COIL/ MODULE 7
IGNITION COIL/ MODULE 2
IGNITION COIL/ MODULE 4
IGNITION COIL/ MODULE 6
IGNITION COIL/ MODULE 8
DRIVER SEAT CONTROL MODULE (SCM)
DRIVER SEAT RELAY CENTER
DRIVER SEAT BELT SWITCH
DRIVER SEAT PUMP
DRIVER SEAT BELT SWITCH
DRIVER SEAT RELAY CENTER
DEFOGGER GRID
ELECTRONIC BRAKE/ CONTROL MODULE (EBCM)
W/ MEMORY
W/O MEMORY
S101 (IN LEFT IGNITION CONTROL MODULE JUMPER, 6 CM FROM BREAKOUT TO C109)
S100 (IN RIGHT IGNITION CONTROL MODULE JUMPER, 6 CM FROM BREAKOUT TO C110)
S301 (IN LEFT POWER SEAT HARNESS, 2.5 CM FROM BREAKOUT FOR C301)
SPORT SEAT
BASE SEAT
G108 (ON FRAME RAIL, BELOW BATTERY TRAY)
G103 (ON LEFT FRAME RAIL, NEAR BRAKE PRESSURE MODULATOR VALVE)
G301 (BEHIND LEFT SEAT AT ANTENNA MODULE)
G205 (BEHIND LEFT SEAT AT ANTENNA MODULE)
G107 (AT TOP LEFT REAR OF ENGINE)
(ON RIGHT SIDE OF ENGINE COMPT) UNDERHOOD FUSE BLOCK
F/PMP RELAY 35
ENGINE OIL LEVEL SWITCH
(ON RIGHT SIDE OF ENGINE COMPT) UNDERHOOD FUSE BLOCK
IGN RELAY 42
POWERTRAIN CONTROL MODULE (PCM)
THROTTLE ACTUATOR CONTROL (TAC) MODULE
MASS AIR FLOW (MAF) SENSOR
(IN ENGINE HARNESS, 6 CM FROM CAMSHAFT POSITION SENSOR BREAKOUT) S112
S110 (IN ENGINE HARNESS, 39 CM FROM MAIN HARNESS LEADING TO PCM)
S120 (IN ENGINE HARNESS, 15 CM FROM MAIN HARNESS, IN BRANCH LEADING TO POWERTRAIN CONTROL MODULE CONNECTORS)
(ON LEFT REAR SIDE OF ENGINE) G105
(ON RIGHT SIDE OF ENGINE, ABOVE STARTER) G106
HVAC CONTROL MODULE
BODY CONTROL MODULE (BCM)
(IN RIGHT FRONT FOOTWELL, MOUNTED TO TOE BOARD) I/P FUSE BLOCK
BOSE RELAY 45
A/T SHIFT LOCK CONTROL SOLENOID
LEFT VANITY MIRROR LAMP
INSIDE REARVIEW MIRROR
RIGHT VANITY MIRROR LAMP
CIGAR LIGHTER
PASSENGER DOOR MODULE (PDM)
PASSENGER DOOR LATCH
RIGHT FOOTWELL COURTESY LAMP
WIRE END TAPED TO INSTRUMENT PANEL HARNESS (BLUNT CUT)
IGNITION SWITCH
IP COMPARTMENT LAMP
BLOWER MOTOR CONTROL PROCESSOR
S202 (IN DASH HARNESS, 39.5 FROM INSIDE REAR VIEW MIRROR BREAKOUT)
(NOT USED)
SPLICE PACK SP202 (IN DASH HARNESS)
G202 (AT BASE OF RIGHT "A" PILLAR)
185572

Fig. 23: Ground Distribution Circuit (2 of 3)

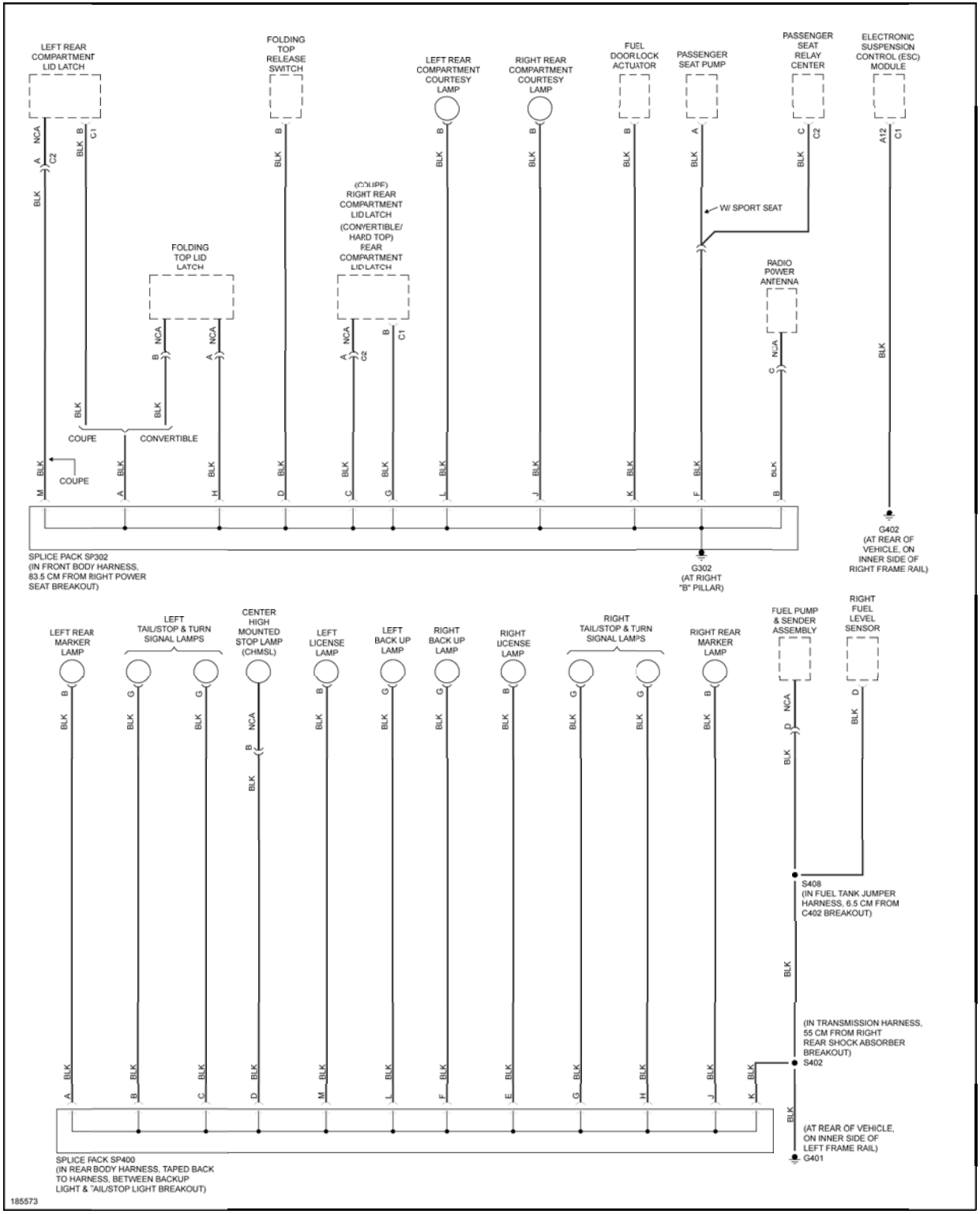
LEFT REAR COMPARTMENT LID LATCH
FOLDING TOP RELEASE SWITCH
LEFT REAR COMPARTMENT COURTESY LAMP
RIGHT REAR COMPARTMENT COURTESY LAMP
FUEL DOOR LOCK ACTUATOR
PASSENGER SEAT PUMP
PASSENGER SEAT RELAY CENTER
ELECTRONIC SUSPENSION CONTROL (ESC) MODULE
(COUPE) RIGHT REAR COMPARTMENT LID LATCH
(CONVERTIBLE/ HARD TOP) REAR COMPARTMENT LID LATCH
FOLDING TOP LID LATCH
RADIO POWER ANTENNA
W/ SPORT SEAT
COUPE
CONVERTIBLE
SPLICE PACK SP302 (IN FRONT BODY HARNESS, 83.5 CM FROM RIGHT POWER SEAT BREAKOUT)
G302 (AT RIGHT "B" PILLAR)
G402 (AT REAR OF VEHICLE, ON INNER SIDE OF RIGHT FRAME RAIL)
LEFT REAR MARKER LAMP
LEFT TAIL/STOP & TURN SIGNAL LAMPS
CENTER HIGH MOUNTED STOP LAMP (CHMSL)
LEFT LICENSE LAMP
LEFT BACK UP LAMP
RIGHT BACK UP LAMP
RIGHT LICENSE LAMP
RIGHT TAIL/STOP & TURN SIGNAL LAMPS
RIGHT REAR MARKER LAMP
FUEL PUMP & SENDER ASSEMBLY
RIGHT FUEL LEVEL SENSOR
S408 (IN FUEL TANK JUMPER HARNESS, 6.5 CM FROM C402 BREAKOUT)
(IN TRANSMISSION HARNESS, 55 CM FROM RIGHT REAR SHOCK ABSORBER BREAKOUT)
S402
(AT REAR OF VEHICLE, ON INNER SIDE OF LEFT FRAME RAIL)
G401
SPLICE PACK SP400 (IN REAR BODY HARNESS, TAPED BACK TO HARNESS, BETWEEN BACKUP LIGHT & TAIL/STOP LIGHT BREAKOUT)
185573

Fig. 24: Ground Distribution Circuit (3 of 3)

HEADLIGHTS

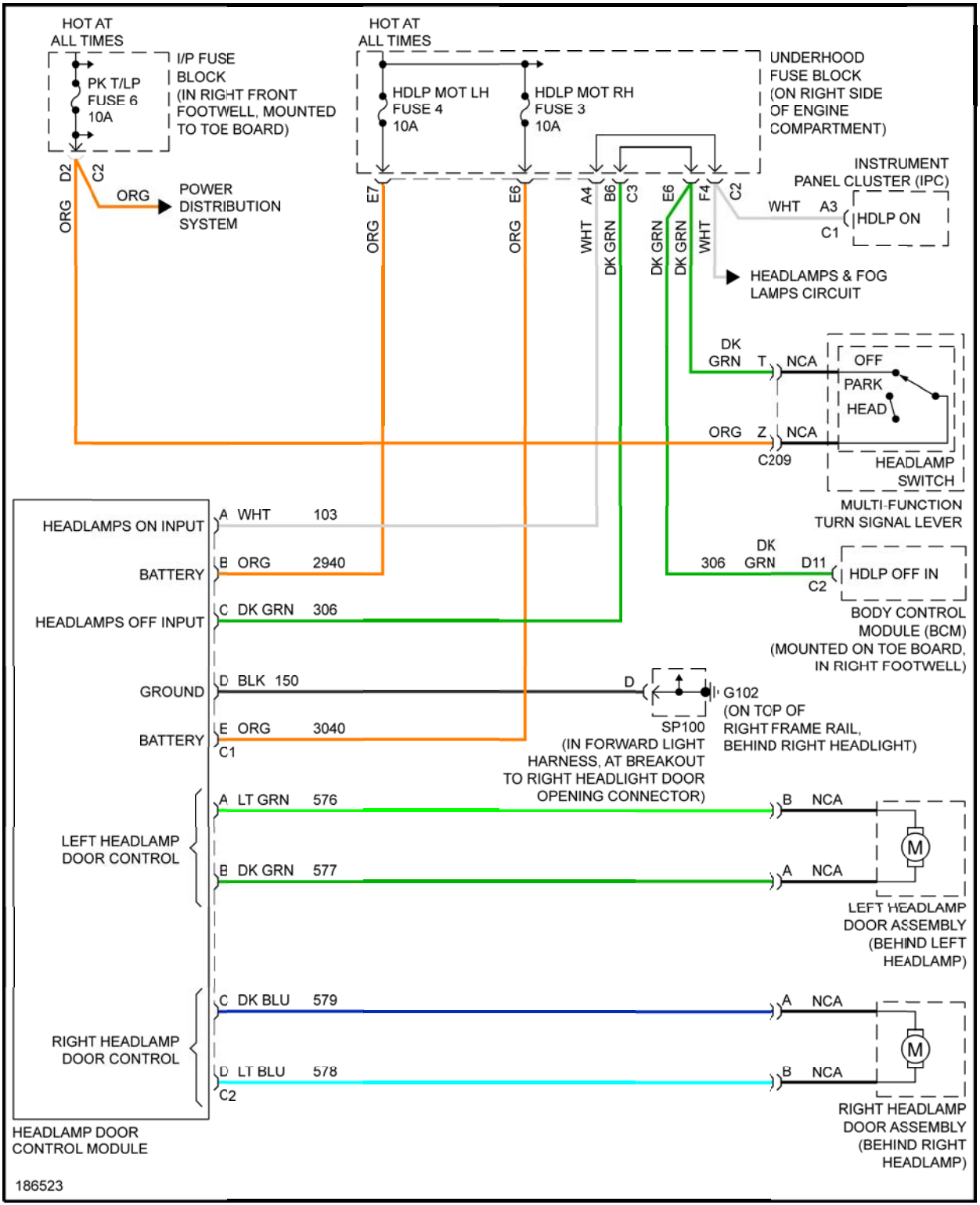
HOT AT ALL TIMES
I/P FUSE BLOCK (IN RIGHT FRONT FOOTWELL, MOUNTED TO TOE BOARD)
PK T/LP FUSE 6 10A
D2
C2
ORG
ORG
POWER DISTRIBUTION SYSTEM
HOT AT ALL TIMES
HDLP MOT LH FUSE 4 10A
HDLP MOT RH FUSE 3 10A
UNDERHOOD FUSE BLOCK (ON RIGHT SIDE OF ENGINE COMPARTMENT)
E7
E6
A4
B6
C3
E6
F4
C2
ORG
ORG
WHT
DK GRN
DK GRN
DK GRN
WHT
INSTRUMENT PANEL CLUSTER (IPC)
WHT
A3
HDLP ON
C1
HEADLAMPS & FOG LAMPS CIRCUIT
DK GRN
T
NCA
OFF
PARK
HEAD
ORG
Z
NCA
C209
HEADLAMP SWITCH
MULTI-FUNCTION TURN SIGNAL LEVER
306
DK GRN
D11
C2
HDLP OFF IN
BODY CONTROL MODULE (BCM) (MOUNTED ON TOE BOARD, IN RIGHT FOOTWELL)
HEADLAMPS ON INPUT
A WHT 103
BATTERY
B ORG 2940
HEADLAMPS OFF INPUT
C DK GRN 306
GROUND
D BLK 150
D
G102 (ON TOP OF RIGHT FRAME RAIL, BEHIND RIGHT HEADLIGHT)
SP100 (IN FORWARD LIGHT HARNESS, AT BREAKOUT TO RIGHT HEADLIGHT DOOR OPENING CONNECTOR)
BATTERY
E ORG 3040
C1
LEFT HEADLAMP DOOR CONTROL
A LT GRN 576
B NCA
B DK GRN 577
A NCA
M
LEFT HEADLAMP DOOR ASSEMBLY (BEHIND LEFT HEADLAMP)
RIGHT HEADLAMP DOOR CONTROL
C DK BLU 579
A NCA
D LT BLU 578
B NCA
C2
M
RIGHT HEADLAMP DOOR ASSEMBLY (BEHIND RIGHT HEADLAMP)
HEADLAMP DOOR CONTROL MODULE
186523

Fig. 25: Headlamp Doors Circuit

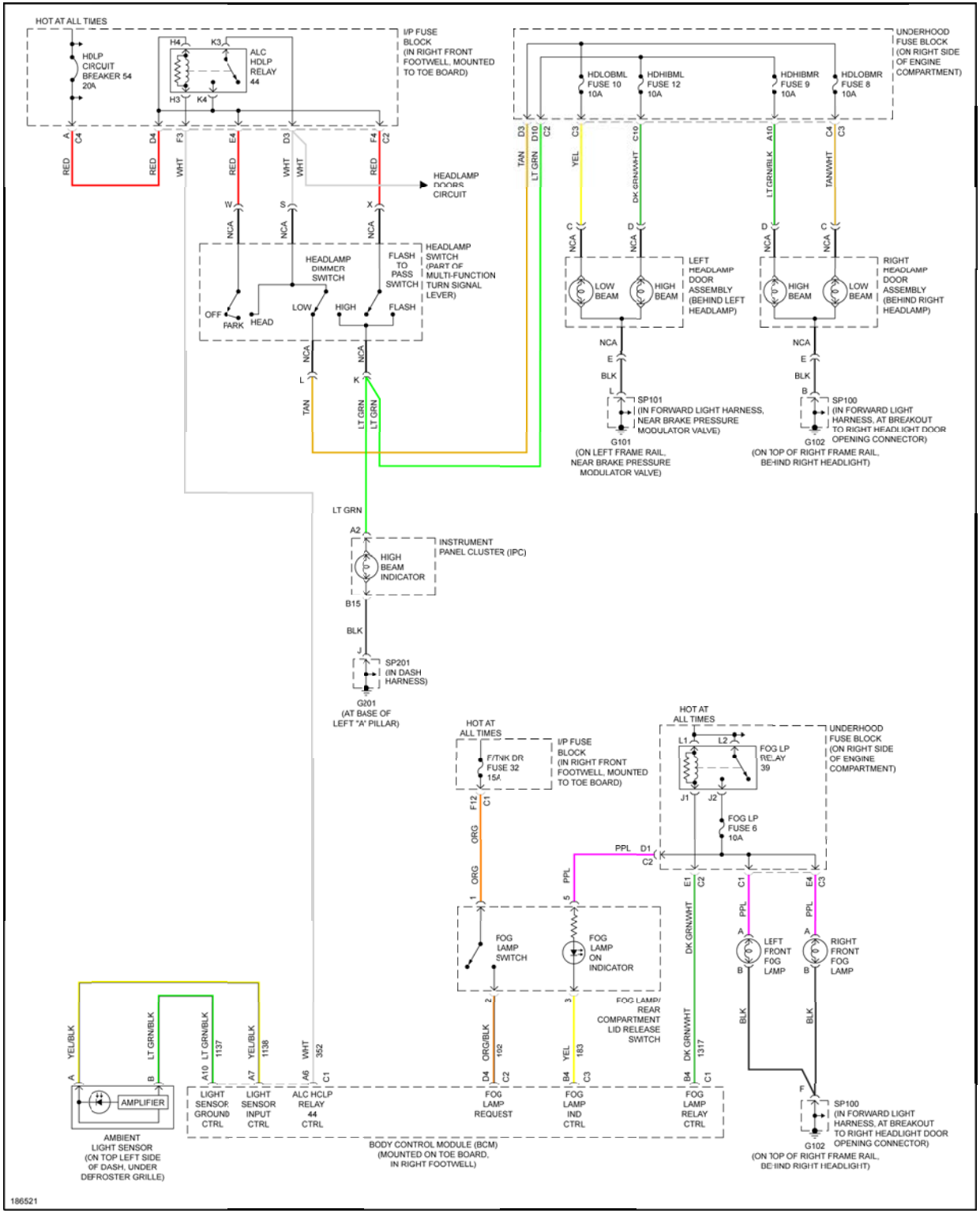
HOT AT ALL TIMES
HDLP CIRCUIT BREAKER 54 20A
ALC HDLP RELAY 44
I/P FUSE BLOCK (IN RIGHT FRONT FOOTWELL, MOUNTED TO TOE BOARD)
UNDERHOOD FUSE BLOCK (ON RIGHT SIDE OF ENGINE COMPARTMENT)
HDLOBML FUSE 10 10A
HDHIBML FUSE 12 10A
HDHIBMR FUSE 9 10A
HDLOBMR FUSE 8 10A
HEADLAMP DOORS CIRCUIT
HEADLAMP DIMMER SWITCH
FLASH TO PASS SWITCH
HEADLAMP SWITCH (PART OF MULTI-FUNCTION TURN SIGNAL LEVER)
OFF
PARK
HEAD
LOW
HIGH
FLASH
LOW BEAM
HIGH BEAM
LEFT HEADLAMP DOOR ASSEMBLY (BEHIND LEFT HEADLAMP)
RIGHT HEADLAMP DOOR ASSEMBLY (BEHIND RIGHT HEADLAMP)
SP101 (IN FORWARD LIGHT HARNESS, NEAR BRAKE PRESSURE MODULATOR VALVE)
G101 (ON LEFT FRAME RAIL, NEAR BRAKE PRESSURE MODULATOR VALVE)
SP100 (IN FORWARD LIGHT HARNESS, AT BREAKOUT TO RIGHT HEADLIGHT DOOR OPENING CONNECTOR)
G102 (ON TOP OF RIGHT FRAME RAIL, BEHIND RIGHT HEADLIGHT)
INSTRUMENT PANEL CLUSTER (IPC)
HIGH BEAM INDICATOR
SP201 (IN DASH HARNESS)
G201 (AT BASE OF LEFT "A" PILLAR)
F/TNK DR FUSE 32 15A
FOG LP RELAY 39
FOG LP FUSE 6 10A
FOG LAMP SWITCH
FOG LAMP ON INDICATOR
FOG LAMP/ REAR COMPARTMENT LID RELEASE SWITCH
LEFT FRONT FOG LAMP
RIGHT FRONT FOG LAMP
AMPLIFIER
AMBIENT LIGHT SENSOR (ON TOP LEFT SIDE OF DASH, UNDER DEFROSTER GRILLE)
LIGHT SENSOR GROUND CTRL
LIGHT SENSOR INPUT CTRL
ALC HCLP RELAY 44 CTRL
FOG LAMP REQUEST
FOG LAMP IND CTRL
FOG LAMP RELAY CTRL
BODY CONTROL MODULE (BCM) (MOUNTED ON TOE BOARD, IN RIGHT FOOTWELL)
186521

Fig. 26: Headlamps & Fog Lamps Circuit

HORN

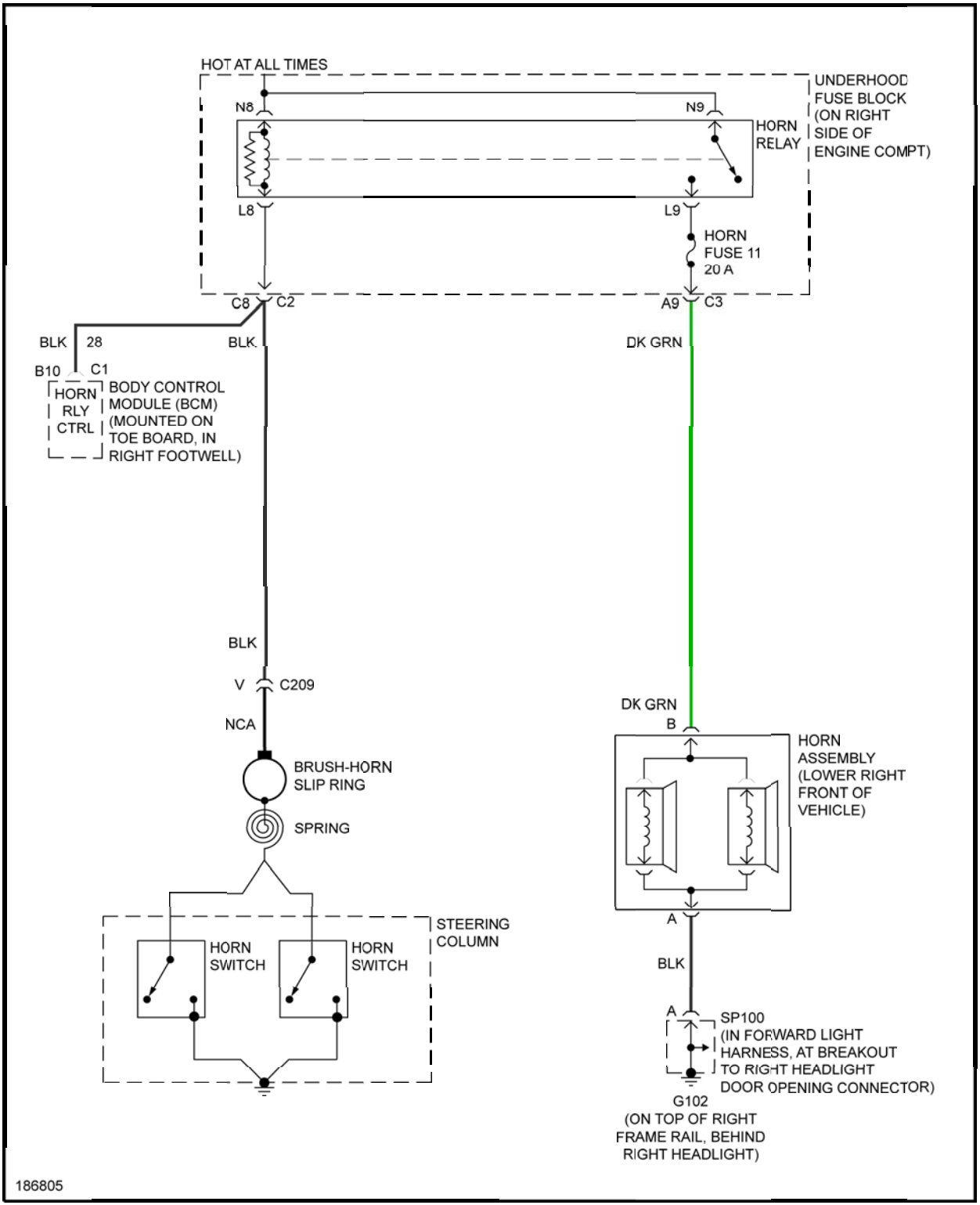
HOT AT ALL TIMES
UNDERHOOD FUSE BLOCK (ON RIGHT SIDE OF ENGINE COMPT)
N8
N9
HORN RELAY
L8
L9
HORN FUSE 11 20 A
C8
C2
A9
C3
BLK
28
BLK
DK GRN
B10
C1
HORN RLY CTRL
BODY CONTROL MODULE (BCM) (MOUNTED ON TOE BOARD, IN RIGHT FOOTWELL)
BLK
V
C209
NCA
BRUSH-HORN SLIP RING
SPRING
DK GRN
B
HORN ASSEMBLY (LOWER RIGHT FRONT OF VEHICLE)
A
STEERING COLUMN
HORN SWITCH
HORN SWITCH
BLK
A
SP100 (IN FORWARD LIGHT HARNESS, AT BREAKOUT TO RIGHT HEADLIGHT DOOR OPENING CONNECTOR)
G102 (ON TOP OF RIGHT FRAME RAIL, BEHIND RIGHT HEADLIGHT)
186805

Fig. 27: Horn Circuit

INSTRUMENT CLUSTER

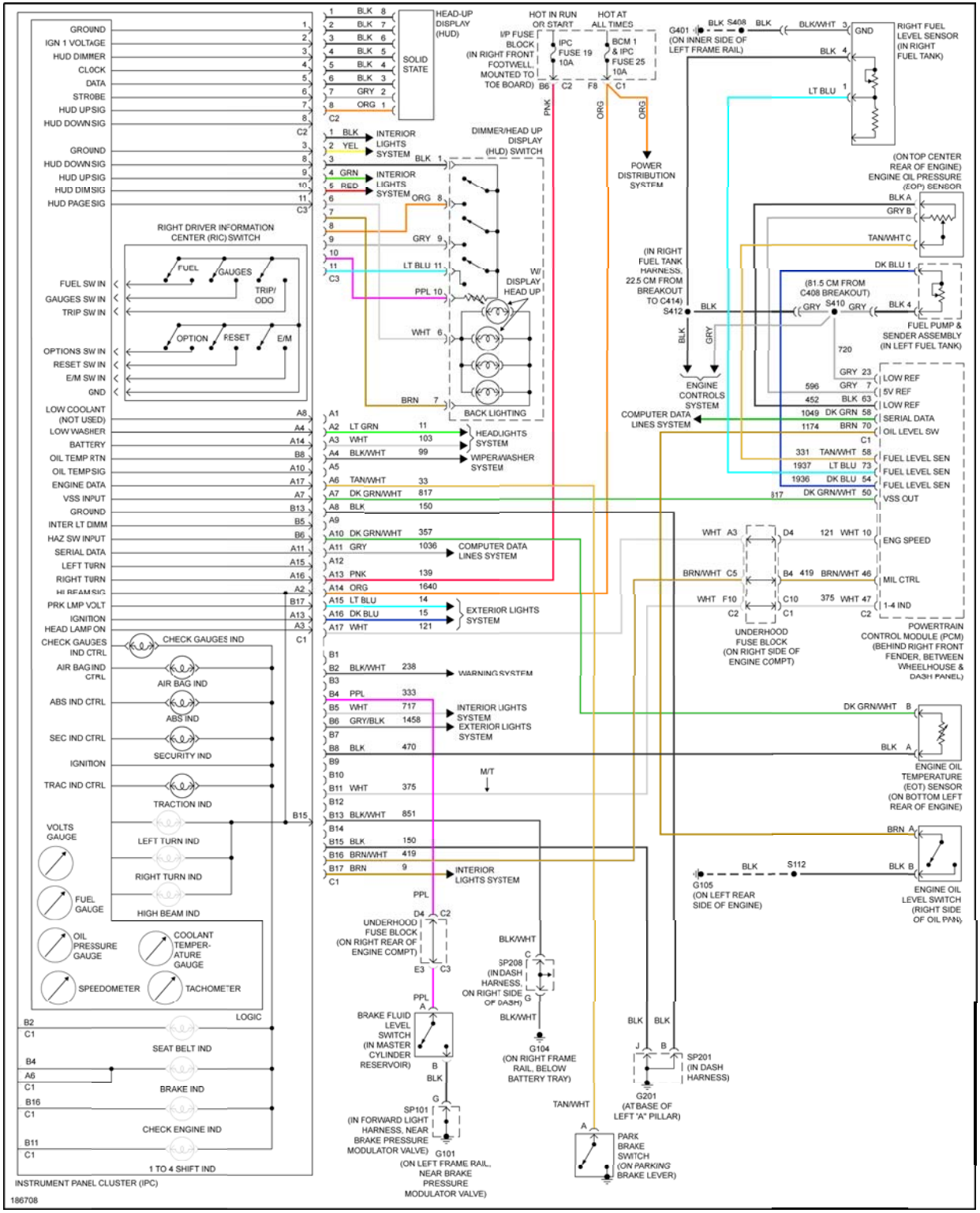
GROUND
IGN 1 VOLTAGE
HUD DIMMER
CLOCK
DATA
STROBE
HUD UP SIG
HUD DOWN SIG
HUD DIM SIG
HUD PAGE SIG
HEAD-UP DISPLAY (HUD)
SOLID STATE
HOT IN RUN OR START
HOT AT ALL TIMES
I/P FUSE BLOCK (IN RIGHT FRONT FOOTWELL, MOUNTED TO TOE BOARD)
IPC FUSE 19 10A
BCM 1 & IPC FUSE 25 10A
INTERIOR LIGHTS SYSTEM
DIMMER/HEAD UP DISPLAY (HUD) SWITCH
POWER DISTRIBUTION SYSTEM
RIGHT DRIVER INFORMATION CENTER (RIC) SWITCH
FUEL
GAUGES
TRIP/ ODO
OPTION
RESET
E/M
FUEL SW IN
GAUGES SW IN
TRIP SW IN
OPTIONS SW IN
RESET SW IN
E/M SW IN
GND
W/ DISPLAY HEAD UP
BACK LIGHTING
LOW COOLANT (NOT USED)
LOW WASHER
BATTERY
OIL TEMP RTN
OIL TEMP SIG
ENGINE DATA
VSS INPUT
INTER LT DIMM
HAZ SW INPUT
SERIAL DATA
LEFT TURN
RIGHT TURN
HI BEAM SIG
PRK LMP VOLT
IGNITION
HEAD LAMP ON
CHECK GAUGES IND CTRL
AIR BAG IND CTRL
ABS IND CTRL
SEC IND CTRL
TRAC IND CTRL
HEADLIGHTS SYSTEM
WIPER/WASHER SYSTEM
COMPUTER DATA LINES SYSTEM
EXTERIOR LIGHTS SYSTEM
WARNING SYSTEM
INTERIOR LIGHTS SYSTEM
M/T
CHECK GAUGES IND
AIR BAG IND
ABS IND
SECURITY IND
TRACTION IND
LEFT TURN IND
RIGHT TURN IND
HIGH BEAM IND
VOLTS GAUGE
FUEL GAUGE
OIL PRESSURE GAUGE
COOLANT TEMPER-ATURE GAUGE
SPEEDOMETER
TACHOMETER
LOGIC
SEAT BELT IND
BRAKE IND
CHECK ENGINE IND
1 TO 4 SHIFT IND
INSTRUMENT PANEL CLUSTER (IPC)
186708
UNDERHOOD FUSE BLOCK (ON RIGHT REAR OF ENGINE COMPT)
BRAKE FLUID LEVEL SWITCH (IN MASTER CYLINDER RESERVOIR)
SP101 (IN FORWARD LIGHT HARNESS, NEAR BRAKE PRESSURE MODULATOR VALVE)
G101 (ON LEFT FRAME RAIL, NEAR BRAKE PRESSURE MODULATOR VALVE)
SP208 (IN DASH HARNESS, ON RIGHT SIDE OF DASH)
G104 (ON RIGHT FRAME RAIL, BELOW BATTERY TRAY)
G201 (AT BASE OF LEFT "A" PILLAR)
SP201 (IN DASH HARNESS)
PARK BRAKE SWITCH (ON PARKING BRAKE LEVER)
G401 (ON INNER SIDE OF LEFT FRAME RAIL)
S408
RIGHT FUEL LEVEL SENSOR (IN RIGHT FUEL TANK)
(ON TOP CENTER REAR OF ENGINE) ENGINE OIL PRESSURE (EOP) SENSOR
(IN RIGHT FUEL TANK HARNESS, 22.5 CM FROM BREAKOUT TO C414)
S412
(81.5 CM FROM C408 BREAKOUT)
S410
FUEL PUMP & SENDER ASSEMBLY (IN LEFT FUEL TANK)
ENGINE CONTROLS SYSTEM
COMPUTER DATA LINES SYSTEM
LOW REF
5V REF
LOW REF
SERIAL DATA
OIL LEVEL SW
FUEL LEVEL SEN
FUEL LEVEL SEN
FUEL LEVEL SEN
VSS OUT
ENG SPEED
MIL CTRL
1-4 IND
UNDERHOOD FUSE BLOCK (ON RIGHT SIDE OF ENGINE COMPT)
POWERTRAIN CONTROL MODULE (PCM) (BEHIND RIGHT FRONT FENDER, BETWEEN WHEELHOUSE & DASH PANEL)
ENGINE OIL TEMPERATURE (EOT) SENSOR (ON BOTTOM LEFT REAR OF ENGINE)
G105 (ON LEFT REAR SIDE OF ENGINE)
S112
ENGINE OIL LEVEL SWITCH (RIGHT SIDE OF OIL PAN)

Fig. 28: Instrument Cluster Circuit

INTERIOR LIGHTS

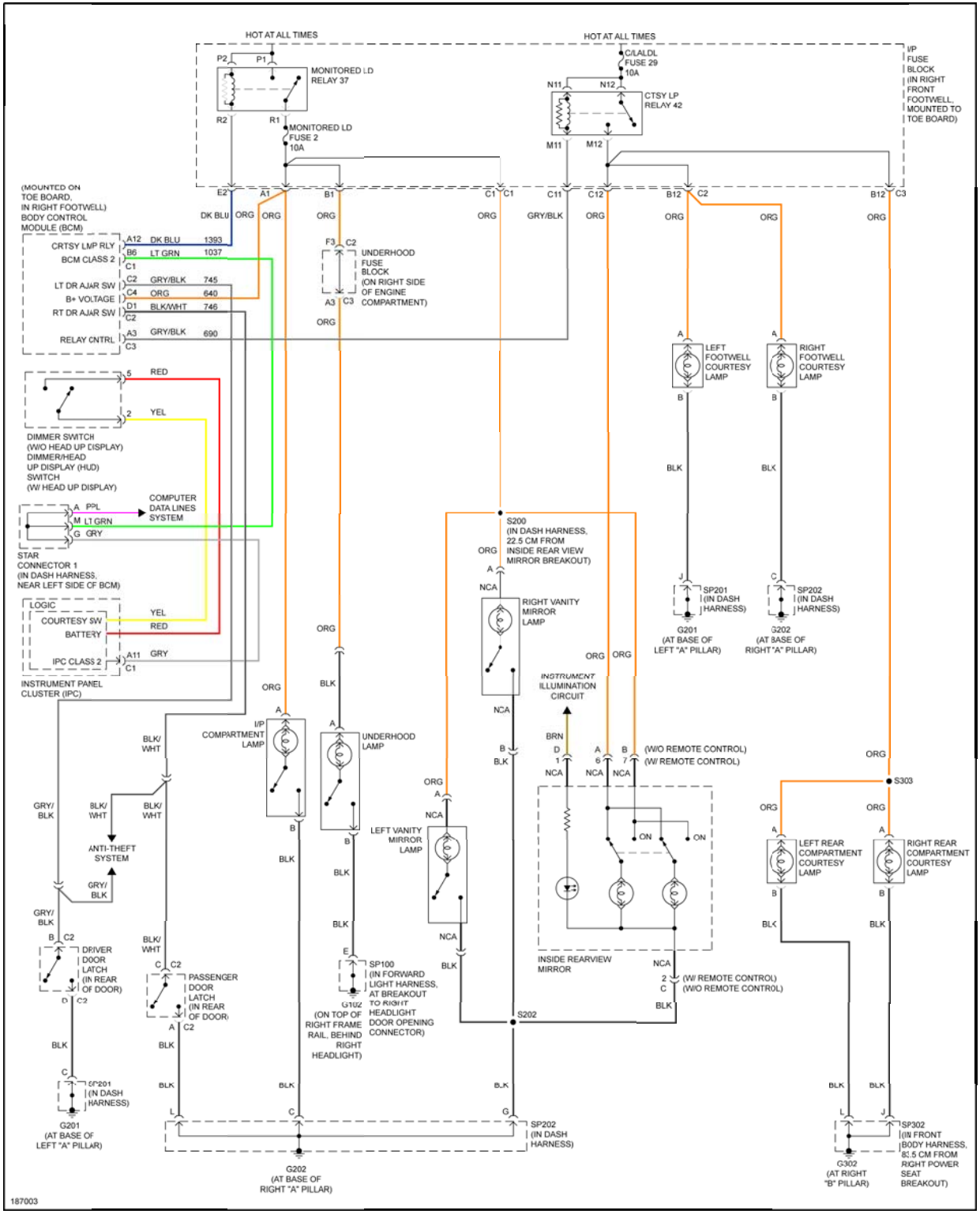
HOT AT ALL TIMES
HOT AT ALL TIMES
MONITORED LD RELAY 37
MONITORED LD FUSE 2 10A
C/LALDL FUSE 29 10A
CTSY LP RELAY 42
I/P FUSE BLOCK (IN RIGHT FRONT FOOTWELL, MOUNTED TO TOE BOARD)
(MOUNTED ON TOE BOARD, IN RIGHT FOOTWELL) BODY CONTROL MODULE (BCM)
CRTSY LMP RLY
BCM CLASS 2
LT DR AJAR SW
B+ VOLTAGE
RT DR AJAR SW
RELAY CNTRL
DK BLU 1393
LT GRN 1037
GRY/BLK 745
ORG 640
BLK/WHT 746
GRY/BLK 690
UNDERHOOD FUSE BLOCK (ON RIGHT SIDE OF ENGINE COMPARTMENT)
LEFT FOOTWELL COURTESY LAMP
RIGHT FOOTWELL COURTESY LAMP
DIMMER SWITCH (W/O HEAD UP DISPLAY) DIMMER/HEAD UP DISPLAY (HUD) SWITCH (W/ HEAD UP DISPLAY)
RED
YEL
COMPUTER DATA LINES SYSTEM
PPL
LT GRN
GRY
STAR CONNECTOR 1 (IN DASH HARNESS, NEAR LEFT SIDE OF BCM)
LOGIC
COURTESY SW
BATTERY
IPC CLASS 2
INSTRUMENT PANEL CLUSTER (IPC)
S200 (IN DASH HARNESS, 22.5 CM FROM INSIDE REAR VIEW MIRROR BREAKOUT)
RIGHT VANITY MIRROR LAMP
SP201 (IN DASH HARNESS)
G201 (AT BASE OF LEFT "A" PILLAR)
SP202 (IN DASH HARNESS)
G202 (AT BASE OF RIGHT "A" PILLAR)
INSTRUMENT ILLUMINATION CIRCUIT
BRN
(W/O REMOTE CONTROL)
(W/ REMOTE CONTROL)
I/P COMPARTMENT LAMP
UNDERHOOD LAMP
LEFT VANITY MIRROR LAMP
ANTI-THEFT SYSTEM
GRY/BLK
BLK/WHT
DRIVER DOOR LATCH (IN REAR OF DOOR)
PASSENGER DOOR LATCH (IN REAR OF DOOR)
SP100 (IN FORWARD LIGHT HARNESS, AT BREAKOUT TO RIGHT HEADLIGHT DOOR OPENING CONNECTOR)
G102 (ON TOP OF RIGHT FRAME RAIL, BEHIND RIGHT HEADLIGHT)
INSIDE REARVIEW MIRROR
(W/ REMOTE CONTROL)
(W/O REMOTE CONTROL)
S202
S303
LEFT REAR COMPARTMENT COURTESY LAMP
RIGHT REAR COMPARTMENT COURTESY LAMP
SP302 (IN FRONT BODY HARNESS, 8.5 CM FROM RIGHT POWER SEAT BREAKOUT)
G302 (AT RIGHT "B" PILLAR)
187003

Fig. 29: Courtesy Lamps Circuit

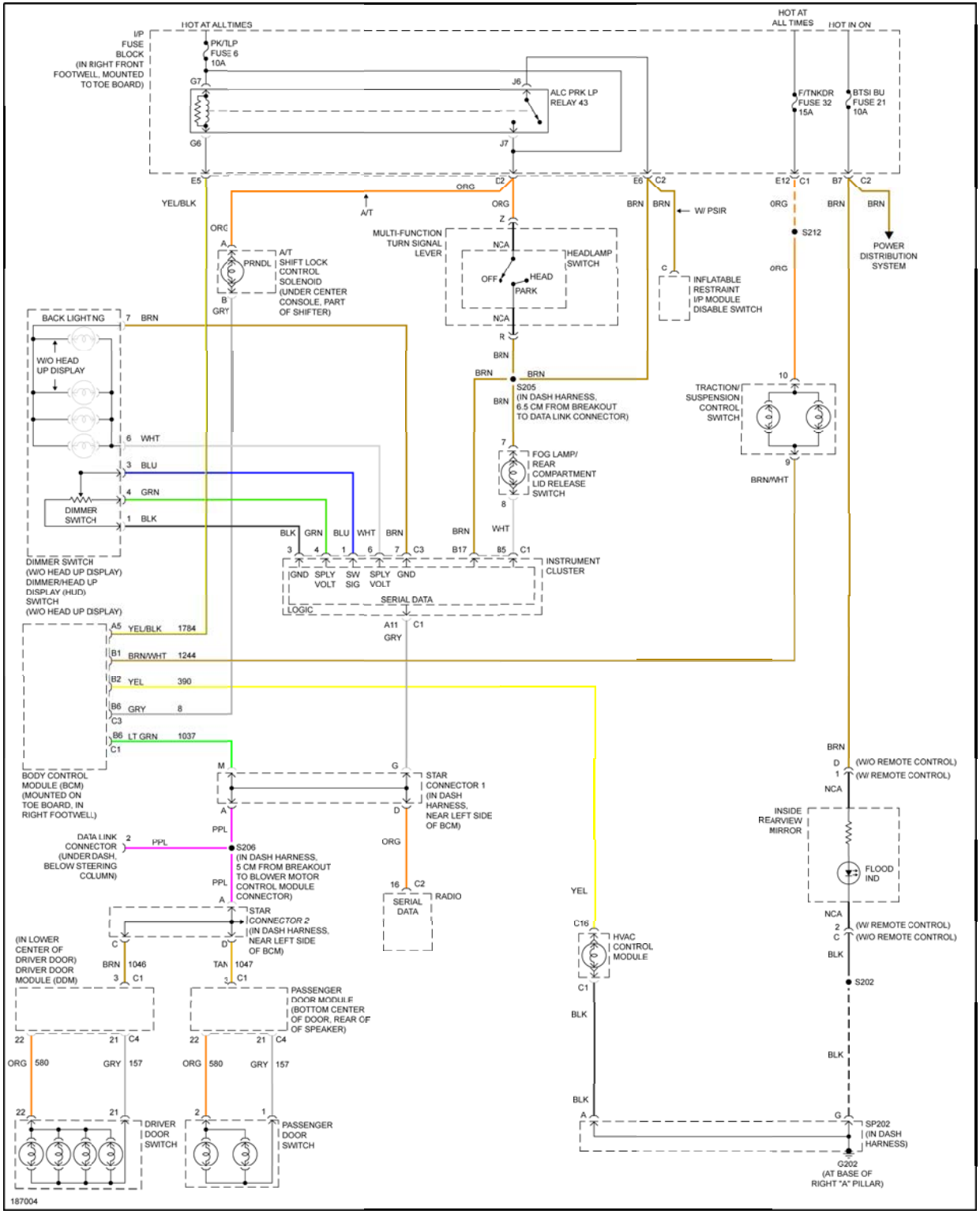
HOT AT ALL TIMES
I/P FUSE BLOCK (IN RIGHT FRONT FOOTWELL, MOUNTED TO TOE BOARD)
PK/TLP FUSE 6 10A
G7
G6
J6
J7
ALC PRK LP RELAY 43
HOT AT ALL TIMES
HOT IN ON
F/TNKDR FUSE 32 15A
BTSI BU FUSE 21 10A
E5
YEL/BLK
ORG
C2
A/T
E6
C2
BRN
BRN
W/ PSIR
E12
C1
B7
C2
BRN
BRN
POWER DISTRIBUTION SYSTEM
S212
ORG
ORG
A
PRNDL
A/T SHIFT LOCK CONTROL SOLENOID (UNDER CENTER CONSOLE, PART OF SHIFTER)
B
GRY
MULTI-FUNCTION TURN SIGNAL LEVER
Z
NCA
HEADLAMP SWITCH
OFF
HEAD
PARK
NCA
R
BRN
C
INFLATABLE RESTRAINT I/P MODULE DISABLE SWITCH
BACK LIGHTING
7 BRN
W/O HEAD UP DISPLAY
6 WHT
3 BLU
4 GRN
DIMMER SWITCH
1 BLK
DIMMER SWITCH (W/O HEAD UP DISPLAY) DIMMER/HEAD UP DISPLAY (HUD) SWITCH (W/O HEAD UP DISPLAY)
BRN
BRN
S205 (IN DASH HARNESS, 6.5 CM FROM BREAKOUT TO DATA LINK CONNECTOR)
BRN
10
TRACTION/ SUSPENSION CONTROL SWITCH
9
BRN/WHT
7
FOG LAMP/ REAR COMPARTMENT LID RELEASE SWITCH
8
WHT
BLK
GRN
BLU
WHT
BRN
BRN
WHT
3
4
1
6
7
C3
B17
B5
C1
INSTRUMENT CLUSTER
GND
SPLY VOLT
SW SIG
SPLY VOLT
GND
SERIAL DATA
LOGIC
A11
C1
GRY
A5 YEL/BLK 1784
B1 BRN/WHT 1244
B2 YEL 390
B6 GRY 8
C3
B6 LT GRN 1037
C1
BODY CONTROL MODULE (BCM) (MOUNTED ON TOE BOARD, IN RIGHT FOOTWELL)
M
G
STAR CONNECTOR 1 (IN DASH HARNESS, NEAR LEFT SIDE OF BCM)
A
D
PPL
ORG
DATA LINK CONNECTOR (UNDER DASH, BELOW STEERING COLUMN)
2
PPL
S206 (IN DASH HARNESS, 5 CM FROM BREAKOUT TO BLOWER MOTOR CONTROL MODULE CONNECTOR)
PPL
A
16
C2
SERIAL DATA
RADIO
STAR CONNECTOR 2 (IN DASH HARNESS, NEAR LEFT SIDE OF BCM)
C
D
(IN LOWER CENTER OF DRIVER DOOR) DRIVER DOOR MODULE (DDM)
BRN 1046
3
C1
TAN 1047
1
C1
PASSENGER DOOR MODULE (BOTTOM CENTER OF DOOR, REAR OF OF SPEAKER)
22
21
C4
ORG 580
GRY 157
22
21
C4
ORG 580
GRY 157
22
21
DRIVER DOOR SWITCH
2
1
PASSENGER DOOR SWITCH
YEL
C16
HVAC CONTROL MODULE
C1
BLK
BLK
A
BRN
D
1
(W/O REMOTE CONTROL)
(W/ REMOTE CONTROL)
NCA
INSIDE REARVIEW MIRROR
FLOOD IND
NCA
2
C
(W/ REMOTE CONTROL)
(W/O REMOTE CONTROL)
BLK
S202
BLK
G
SP202 (IN DASH HARNESS)
G202 (AT BASE OF RIGHT "A" PILLAR)
187004

Fig. 30: Instrument Illumination Circuit

MEMORY SYSTEMS

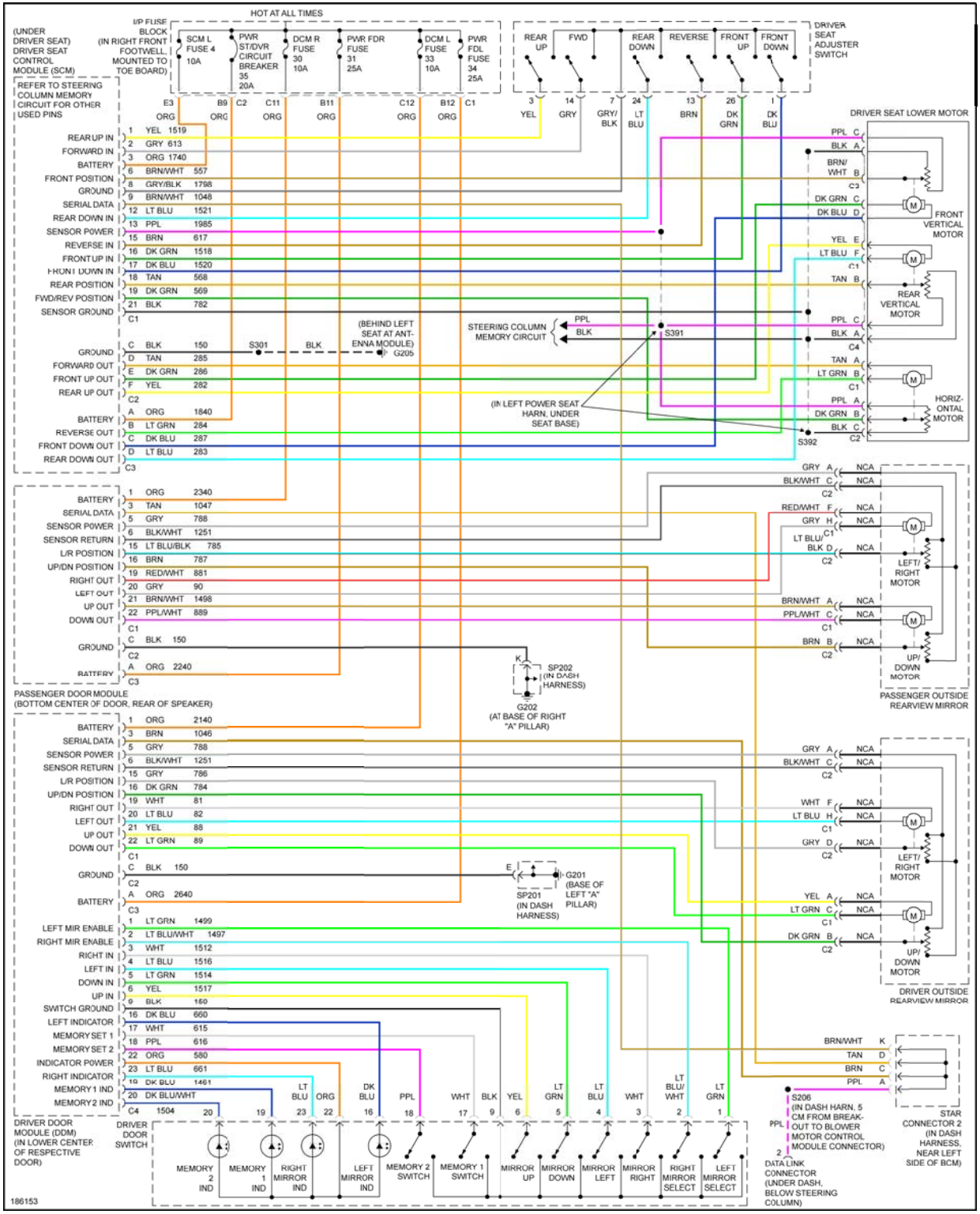
HOT AT ALL TIMES
I/P FUSE BLOCK (IN RIGHT FRONT FOOTWELL, MOUNTED TO TOE BOARD)
(UNDER DRIVER SEAT) DRIVER SEAT CONTROL MODULE (SCM)
SCM L FUSE 4 10A
PWR ST/DVR CIRCUIT BREAKER 35 20A
DCM R FUSE 30 10A
PWR FDR FUSE 31 25A
DCM L FUSE 33 10A
PWR FDL FUSE 34 25A
REAR UP
FWD
REAR DOWN
REVERSE
FRONT UP
FRONT DOWN
DRIVER SEAT ADJUSTER SWITCH
REFER TO STEERING COLUMN MEMORY CIRCUIT FOR OTHER USED PINS
REAR UP IN
FORWARD IN
BATTERY
FRONT POSITION
GROUND
SERIAL DATA
REAR DOWN IN
SENSOR POWER
REVERSE IN
FRONT UP IN
FRONT DOWN IN
REAR POSITION
FWD/REV POSITION
SENSOR GROUND
GROUND
FORWARD OUT
FRONT UP OUT
REAR UP OUT
BATTERY
REVERSE OUT
FRONT DOWN OUT
REAR DOWN OUT
DRIVER SEAT LOWER MOTOR
FRONT VERTICAL MOTOR
REAR VERTICAL MOTOR
HORIZ-ONTAL MOTOR
(BEHIND LEFT SEAT AT ANT-ENNA MODULE)
G205
S301
STEERING COLUMN MEMORY CIRCUIT
S391
(IN LEFT POWER SEAT HARN, UNDER SEAT BASE)
S392
PASSENGER DOOR MODULE (BOTTOM CENTER OF DOOR, REAR OF SPEAKER)
BATTERY
SERIAL DATA
SENSOR POWER
SENSOR RETURN
L/R POSITION
UP/DN POSITION
RIGHT OUT
LEFT OUT
UP OUT
DOWN OUT
GROUND
BATTERY
SP202 (IN DASH HARNESS)
G202 (AT BASE OF RIGHT "A" PILLAR)
PASSENGER OUTSIDE REARVIEW MIRROR
LEFT/ RIGHT MOTOR
UP/ DOWN MOTOR
DRIVER OUTSIDE REARVIEW MIRROR
SP201 (IN DASH HARNESS)
G201 (BASE OF LEFT "A" PILLAR)
LEFT MIR ENABLE
RIGHT MIR ENABLE
RIGHT IN
LEFT IN
DOWN IN
UP IN
SWITCH GROUND
LEFT INDICATOR
MEMORY SET 1
MEMORY SET 2
INDICATOR POWER
RIGHT INDICATOR
MEMORY 1 IND
MEMORY 2 IND
DRIVER DOOR MODULE (DDM) (IN LOWER CENTER OF RESPECTIVE DOOR)
DRIVER DOOR SWITCH
MEMORY 2 IND
MEMORY 1 IND
RIGHT MIRROR IND
LEFT MIRROR IND
MEMORY 2 SWITCH
MEMORY 1 SWITCH
MIRROR UP
MIRROR DOWN
MIRROR LEFT
MIRROR RIGHT
RIGHT MIRROR SELECT
LEFT MIRROR SELECT
S206 (IN DASH HARN, 5 CM FROM BREAK-OUT TO BLOWER MOTOR CONTROL MODULE CONNECTOR)
DATA LINK CONNECTOR (UNDER DASH, BELOW STEERING COLUMN)
STAR CONNECTOR 2 (IN DASH HARNESS, NEAR LEFT SIDE OF BCM)
186153

Fig. 31: Memory Seat & Mirrors Circuit

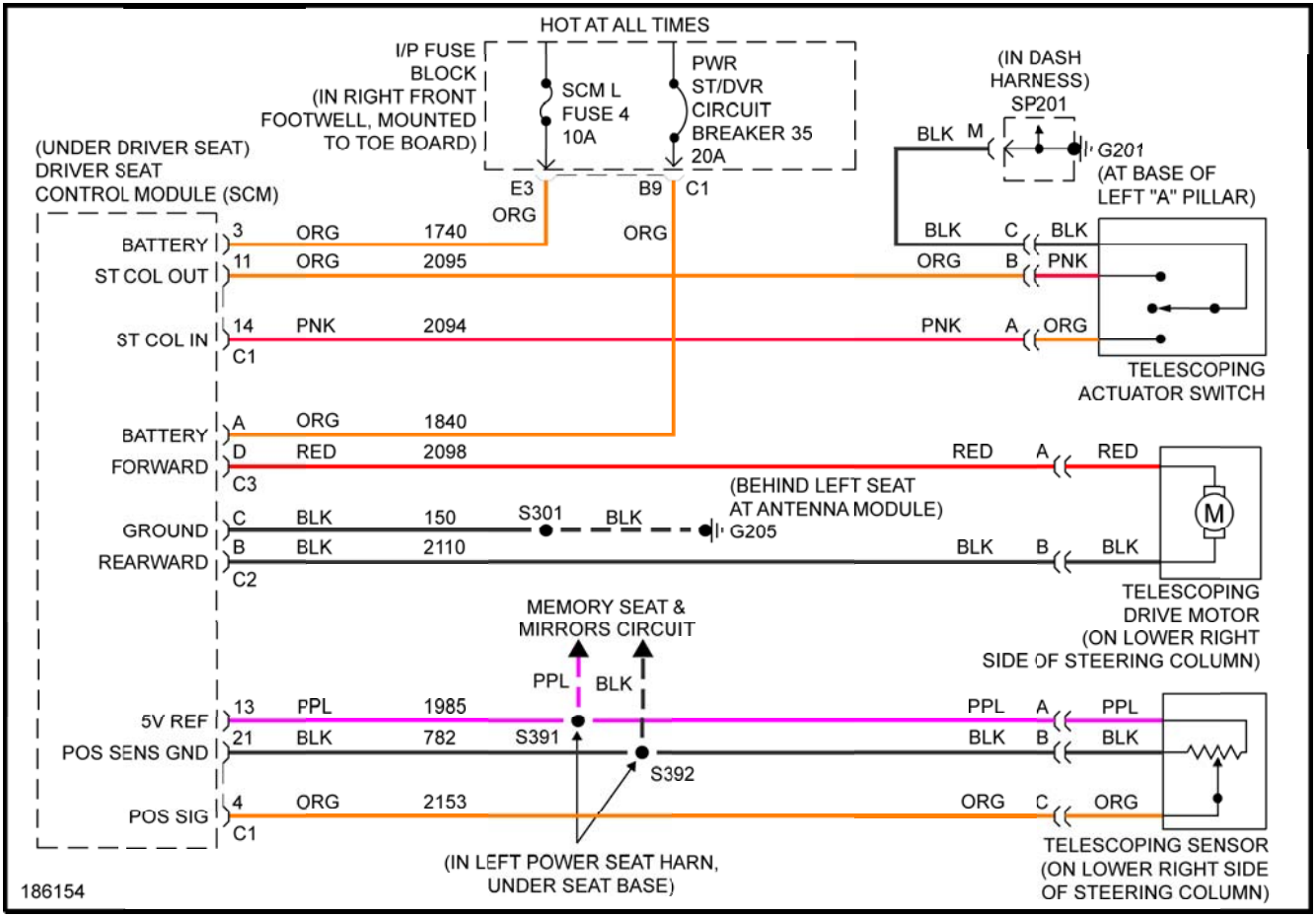
HOT AT ALL TIMES
I/P FUSE BLOCK (IN RIGHT FRONT FOOTWELL, MOUNTED TO TOE BOARD)
SCM L FUSE 4 10A
PWR ST/DVR CIRCUIT BREAKER 35 20A
(IN DASH HARNESS) SP201
G201 (AT BASE OF LEFT "A" PILLAR)
(UNDER DRIVER SEAT) DRIVER SEAT CONTROL MODULE (SCM)
E3
B9
C1
ORG
BLK
M
BATTERY
ST COL OUT
ST COL IN
3 ORG 1740
11 ORG 2095
14 PNK 2094
C1
BLK C BLK
ORG B PNK
PNK A ORG
TELESCOPING ACTUATOR SWITCH
BATTERY
FORWARD
A ORG 1840
D RED 2098
C3
RED A RED
(BEHIND LEFT SEAT AT ANTENNA MODULE)
GROUND
REARWARD
C BLK 150
B BLK 2110
C2
S301
BLK
G205
BLK B BLK
M
TELESCOPING DRIVE MOTOR (ON LOWER RIGHT SIDE OF STEERING COLUMN)
MEMORY SEAT & MIRRORS CIRCUIT
PPL
BLK
5V REF
POS SENS GND
13 PPL 1985
21 BLK 782
S391
S392
PPL A PPL
BLK B BLK
POS SIG
4 ORG 2153
C1
ORG C ORG
(IN LEFT POWER SEAT HARN, UNDER SEAT BASE)
TELESCOPING SENSOR (ON LOWER RIGHT SIDE OF STEERING COLUMN)
186154

Fig. 32: Steering Column Memory Circuit

POWER ANTENNA

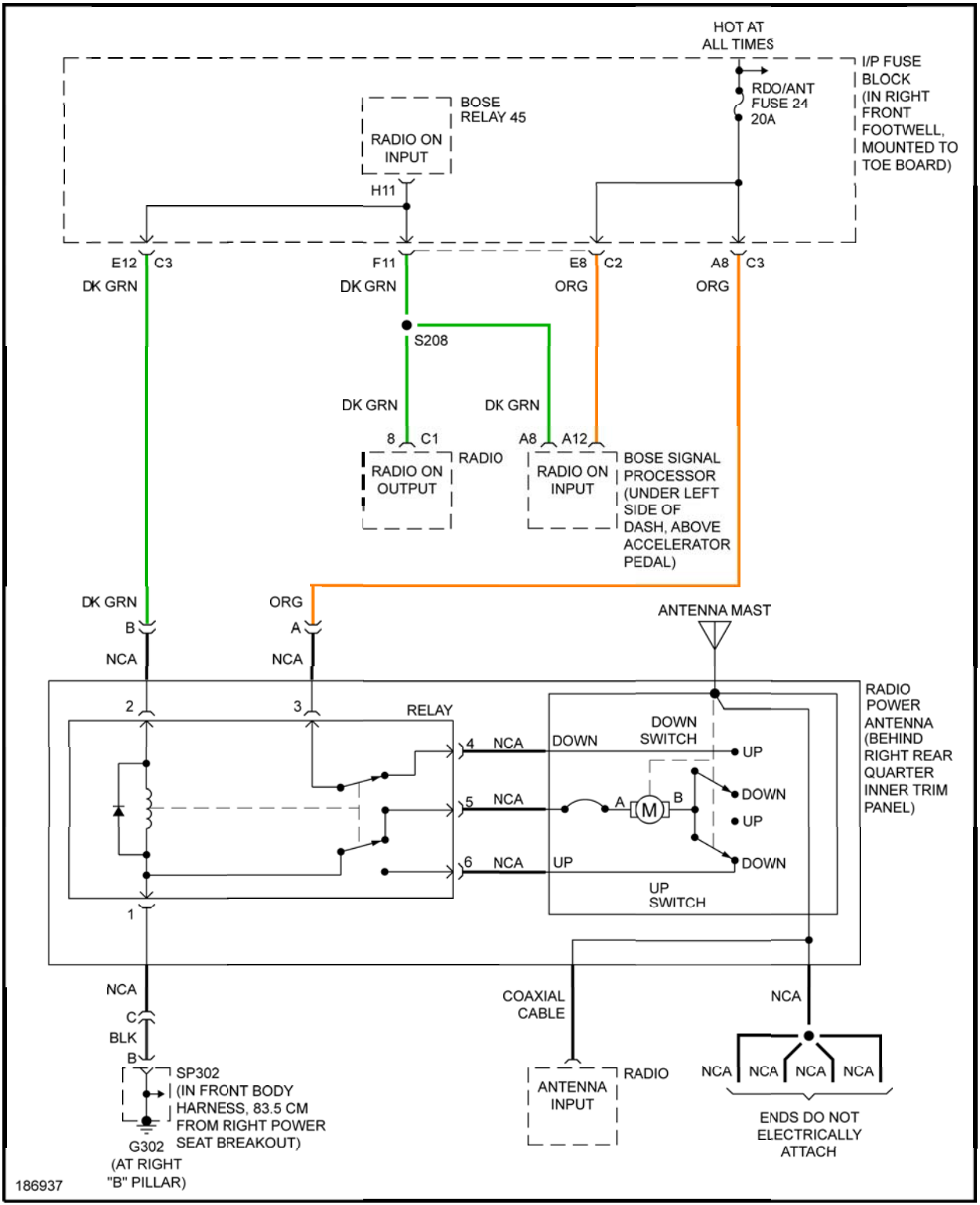
HOT AT ALL TIMES
I/P FUSE BLOCK (IN RIGHT FRONT FOOTWELL, MOUNTED TO TOE BOARD)
RDO/ANT FUSE 21 20A
BOSE RELAY 45
RADIO ON INPUT
H11
E12 C3
DK GRN
F11
DK GRN
E8 C2
ORG
A8 C3
ORG
S208
DK GRN
DK GRN
8 C1
RADIO ON OUTPUT
RADIO
A8 A12
RADIO ON INPUT
BOSE SIGNAL PROCESSOR (UNDER LEFT SIDE OF DASH, ABOVE ACCELERATOR PEDAL)
DK GRN
B
NCA
ORG
A
NCA
ANTENNA MAST
2
3
RELAY
4 NCA
5 NCA
6 NCA
DOWN
UP
DOWN SWITCH
A
M
B
DOWN
UP
DOWN
UP SWITCH
RADIO POWER ANTENNA (BEHIND RIGHT REAR QUARTER INNER TRIM PANEL)
1
NCA
C
BLK
B
SP302 (IN FRONT BODY HARNESS, 83.5 CM FROM RIGHT POWER SEAT BREAKOUT)
G302 (AT RIGHT "B" PILLAR)
COAXIAL CABLE
ANTENNA INPUT
RADIO
NCA
NCA NCA NCA NCA
ENDS DO NOT ELECTRICALLY ATTACH
186937

Fig. 33: Power Antenna Circuit

POWER DISTRIBUTION

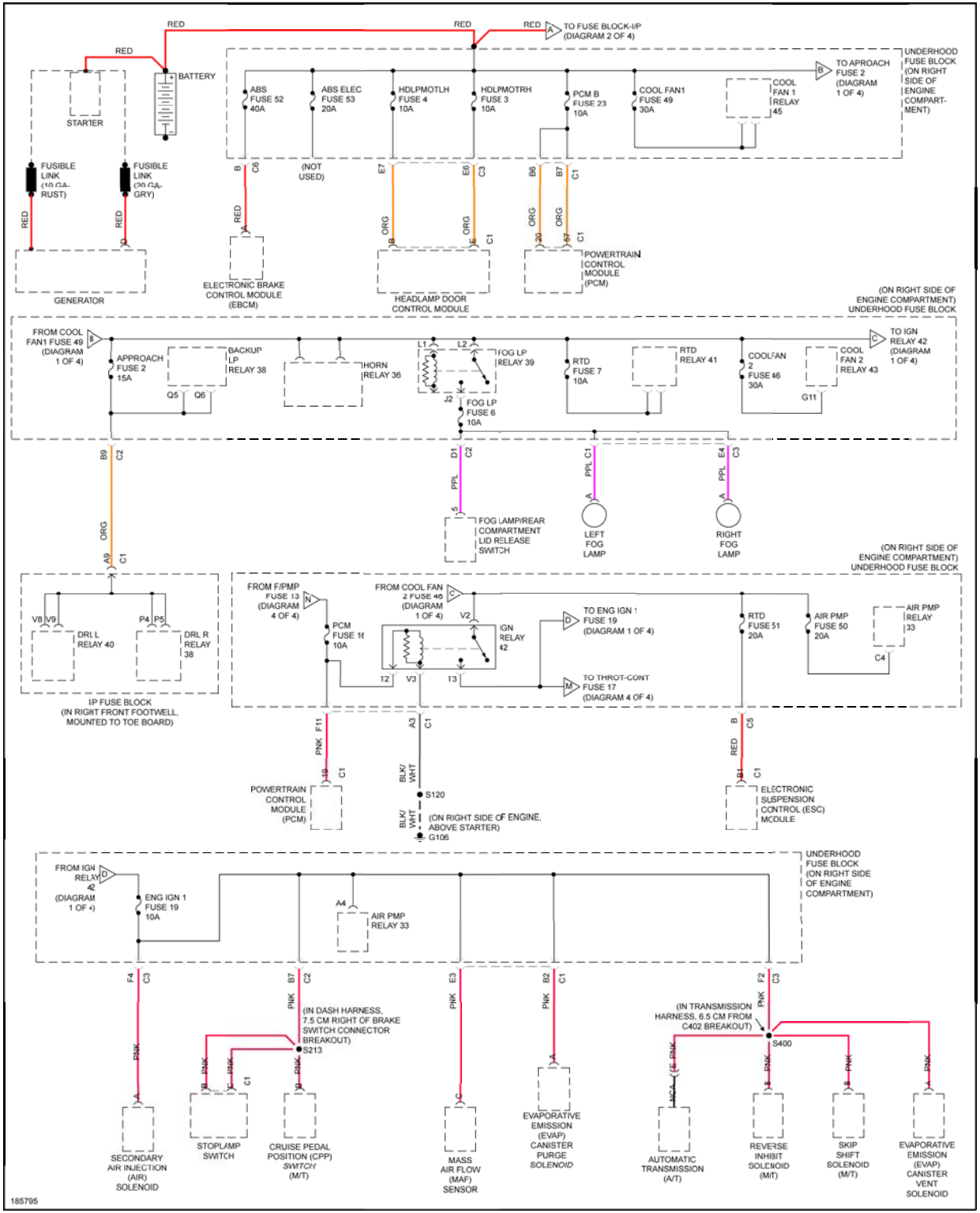
RED
TO FUSE BLOCK-I/P (DIAGRAM 2 OF 4)
BATTERY
STARTER
ABS FUSE 52 40A
ABS ELEC FUSE 53 20A
HDLPMOTLH FUSE 4 10A
HDLPMOTRH FUSE 3 10A
PCM B FUSE 23 10A
COOL FAN1 FUSE 49 30A
COOL FAN 1 RELAY 45
TO APROACH FUSE 2 (DIAGRAM 1 OF 4)
UNDERHOOD FUSE BLOCK (ON RIGHT SIDE OF ENGINE COMPART-MENT)
FUSIBLE LINK (10 GA-RUST)
FUSIBLE LINK (20 GA-GRY)
(NOT USED)
ORG
GENERATOR
ELECTRONIC BRAKE CONTROL MODULE (EBCM)
HEADLAMP DOOR CONTROL MODULE
POWERTRAIN CONTROL MODULE (PCM)
(ON RIGHT SIDE OF ENGINE COMPARTMENT) UNDERHOOD FUSE BLOCK
FROM COOL FAN1 FUSE 49 (DIAGRAM 1 OF 4)
APPROACH FUSE 2 15A
BACKUP LP RELAY 38
HORN RELAY 36
FOG LP RELAY 39
FOG LP FUSE 6 10A
RTD FUSE 7 10A
RTD RELAY 41
COOLFAN 2 FUSE 46 30A
COOL FAN 2 RELAY 43
TO IGN RELAY 42 (DIAGRAM 1 OF 4)
PPL
FOG LAMP/REAR COMPARTMENT LID RELEASE SWITCH
LEFT FOG LAMP
RIGHT FOG LAMP
DRL L RELAY 40
DRL R RELAY 38
I/P FUSE BLOCK (IN RIGHT FRONT FOOTWELL, MOUNTED TO TOE BOARD)
FROM F/PMP FUSE 13 (DIAGRAM 4 OF 4)
FROM COOL FAN 2 FUSE 46 (DIAGRAM 1 OF 4)
PCM FUSE 16 10A
IGN RELAY 42
TO ENG IGN 1 FUSE 19 (DIAGRAM 1 OF 4)
TO THROT-CONT FUSE 17 (DIAGRAM 4 OF 4)
RTD FUSE 51 20A
AIR PMP FUSE 50 20A
AIR PMP RELAY 33
PNK
BLK/WHT
S120
(ON RIGHT SIDE OF ENGINE, ABOVE STARTER)
G106
POWERTRAIN CONTROL MODULE (PCM)
ELECTRONIC SUSPENSION CONTROL (ESC) MODULE
FROM IGN RELAY 42 (DIAGRAM 1 OF 4)
ENG IGN 1 FUSE 19 10A
AIR PMP RELAY 33
UNDERHOOD FUSE BLOCK (ON RIGHT SIDE OF ENGINE COMPARTMENT)
(IN DASH HARNESS, 7.5 CM RIGHT OF BRAKE SWITCH CONNECTOR BREAKOUT)
S213
(IN TRANSMISSION HARNESS, 6.5 CM FROM C402 BREAKOUT)
S400
SECONDARY AIR INJECTION (AIR) SOLENOID
STOPLAMP SWITCH
CRUISE PEDAL POSITION (CPP) SWITCH (M/T)
MASS AIR FLOW (MAF) SENSOR
EVAPORATIVE EMISSION (EVAP) CANISTER PURGE SOLENOID
AUTOMATIC TRANSMISSION (A/T)
REVERSE INHIBIT SOLENOID (M/T)
SKIP SHIFT SOLENOID (M/T)
EVAPORATIVE EMISSION (EVAP) CANISTER VENT SOLENOID
185795

Fig. 34: Power Distribution Circuit (1 of 4)

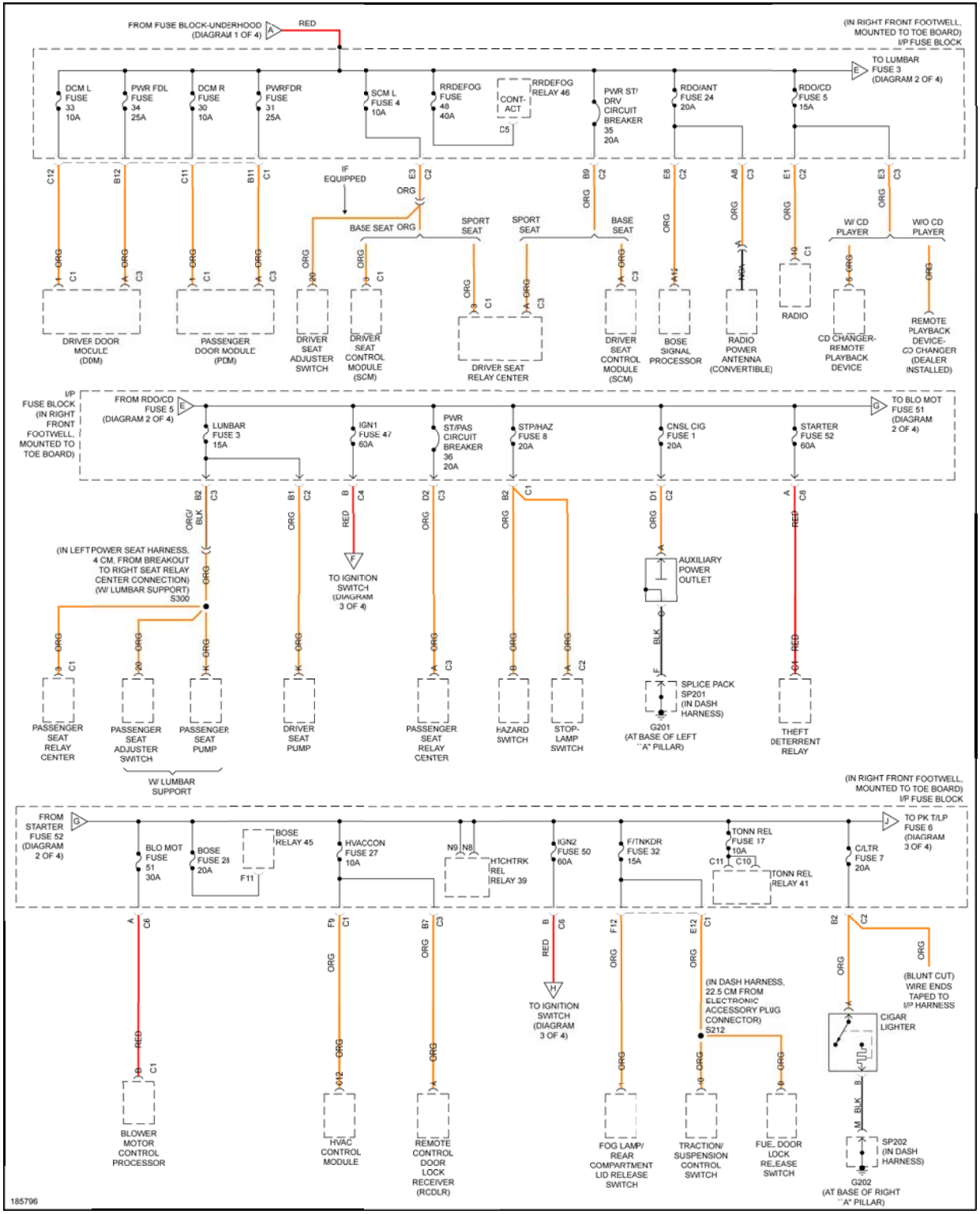
FROM FUSE BLOCK-UNDERHOOD (DIAGRAM 1 OF 4)
RED
(IN RIGHT FRONT FOOTWELL, MOUNTED TO TOE BOARD) I/P FUSE BLOCK
TO LUMBAR FUSE 3 (DIAGRAM 2 OF 4)
DCM L FUSE 33 10A
PWR FDL FUSE 34 25A
DCM R FUSE 30 10A
PWRFDR FUSE 31 25A
SCM L FUSE 4 10A
RRDEFOG FUSE 40 40A
CONT-ACT
RRDEFOG RELAY 46
PWR ST/DRV CIRCUIT BREAKER 35 20A
RDO/ANT FUSE 24 20A
RDO/CD FUSE 5 15A
IF EQUIPPED
BASE SEAT
SPORT SEAT
W/ CD PLAYER
W/O CD PLAYER
DRIVER DOOR MODULE (DDM)
PASSENGER DOOR MODULE (PDM)
DRIVER SEAT ADJUSTER SWITCH
DRIVER SEAT CONTROL MODULE (SCM)
DRIVER SEAT RELAY CENTER
BOSE SIGNAL PROCESSOR
RADIO POWER ANTENNA (CONVERTIBLE)
RADIO
CD CHANGER-REMOTE PLAYBACK DEVICE
REMOTE PLAYBACK DEVICE-CD CHANGER (DEALER INSTALLED)
I/P FUSE BLOCK (IN RIGHT FRONT FOOTWELL, MOUNTED TO TOE BOARD)
FROM RDO/CD FUSE 5 (DIAGRAM 2 OF 4)
TO BLO MOT FUSE 51 (DIAGRAM 2 OF 4)
LUMBAR FUSE 3 15A
IGN1 FUSE 47 60A
PWR ST/PAS CIRCUIT BREAKER 36 20A
STP/HAZ FUSE 8 20A
CNSL CIG FUSE 1 20A
STARTER FUSE 52 60A
(IN LEFT POWER SEAT HARNESS, 4 CM, FROM BREAKOUT TO RIGHT SEAT RELAY CENTER CONNECTION) (W/ LUMBAR SUPPORT) S300
TO IGNITION SWITCH (DIAGRAM 3 OF 4)
AUXILIARY POWER OUTLET
SPLICE PACK SP201 (IN DASH HARNESS)
G201 (AT BASE OF LEFT "A" PILLAR)
PASSENGER SEAT RELAY CENTER
PASSENGER SEAT ADJUSTER SWITCH
PASSENGER SEAT PUMP
W/ LUMBAR SUPPORT
DRIVER SEAT PUMP
PASSENGER SEAT RELAY CENTER
HAZARD SWITCH
STOP-LAMP SWITCH
THEFT DETERRENT RELAY
(IN RIGHT FRONT FOOTWELL, MOUNTED TO TOE BOARD) I/P FUSE BLOCK
FROM STARTER FUSE 52 (DIAGRAM 2 OF 4)
TO PK T/LP FUSE 6 (DIAGRAM 3 OF 4)
BLO MOT FUSE 51 30A
BOSE FUSE 28 20A
BOSE RELAY 45
HVACCON FUSE 27 10A
HTCHTRK REL RELAY 39
IGN2 FUSE 50 60A
F/TNKDR FUSE 32 15A
TONN REL FUSE 17 10A
TONN REL RELAY 41
C/LTR FUSE 7 20A
TO IGNITION SWITCH (DIAGRAM 3 OF 4)
(IN DASH HARNESS, 22.5 CM FROM ELECTRONIC ACCESSORY PLUG CONNECTOR) S212
(BLUNT CUT) WIRE ENDS TAPED TO I/P HARNESS
CIGAR LIGHTER
SP202 (IN DASH HARNESS)
G202 (AT BASE OF RIGHT "A" PILLAR)
BLOWER MOTOR CONTROL PROCESSOR
HVAC CONTROL MODULE
REMOTE CONTROL DOOR LOCK RECEIVER (RCDLR)
FOG LAMP/REAR COMPARTMENT LID RELEASE SWITCH
TRACTION/SUSPENSION CONTROL SWITCH
FUEL DOOR LOCK RELEASE SWITCH
185796

Fig. 35: Power Distribution Circuit (2 of 4)

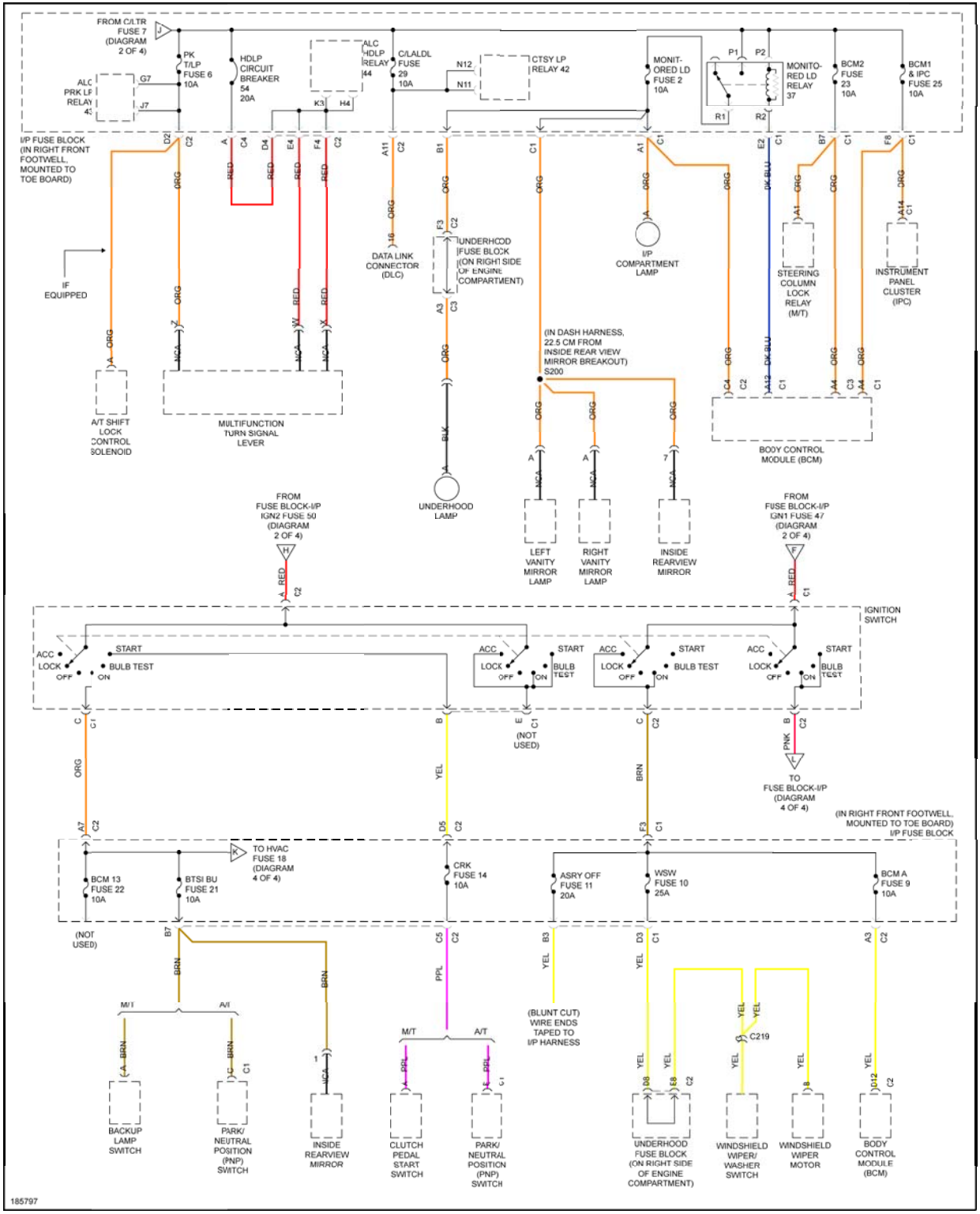
FROM C/LTR FUSE 7 (DIAGRAM 2 OF 4)
PK T/LP FUSE 6 10A
HDLP CIRCUIT BREAKER 54 20A
ALC HDLP RELAY 44
C/LALDL FUSE 29 10A
CTSY LP RELAY 42
MONITORED LD FUSE 2 10A
MONITORED LD RELAY 37
BCM2 FUSE 23 10A
BCM1 & IPC FUSE 25 10A
ALC PRK LP RELAY 43
I/P FUSE BLOCK (IN RIGHT FRONT FOOTWELL, MOUNTED TO TOE BOARD)
IF EQUIPPED
DATA LINK CONNECTOR (DLC)
UNDERHOOD FUSE BLOCK (ON RIGHT SIDE OF ENGINE COMPARTMENT)
I/P COMPARTMENT LAMP
STEERING COLUMN LOCK RELAY (M/T)
INSTRUMENT PANEL CLUSTER (IPC)
A/T SHIFT LOCK CONTROL SOLENOID
MULTIFUNCTION TURN SIGNAL LEVER
(IN DASH HARNESS, 22.5 CM FROM INSIDE REAR VIEW MIRROR BREAKOUT) S200
BODY CONTROL MODULE (BCM)
UNDERHOOD LAMP
LEFT VANITY MIRROR LAMP
RIGHT VANITY MIRROR LAMP
INSIDE REARVIEW MIRROR
FROM FUSE BLOCK-I/P IGN2 FUSE 50 (DIAGRAM 2 OF 4)
FROM FUSE BLOCK-I/P IGN1 FUSE 47 (DIAGRAM 2 OF 4)
IGNITION SWITCH
ACC
LOCK
OFF
START
BULB TEST
ON
(NOT USED)
TO FUSE BLOCK-I/P (DIAGRAM 4 OF 4)
(IN RIGHT FRONT FOOTWELL, MOUNTED TO TOE BOARD) I/P FUSE BLOCK
TO HVAC FUSE 18 (DIAGRAM 4 OF 4)
BCM 13 FUSE 22 10A
BTSI BU FUSE 21 10A
CRK FUSE 14 10A
ASRY OFF FUSE 11 20A
WSW FUSE 10 25A
BCM A FUSE 9 10A
(NOT USED)
M/T
A/T
(BLUNT CUT) WIRE ENDS TAPED TO I/P HARNESS
C219
BACKUP LAMP SWITCH
PARK/ NEUTRAL POSITION (PNP) SWITCH
INSIDE REARVIEW MIRROR
CLUTCH PEDAL START SWITCH
PARK/ NEUTRAL POSITION (PNP) SWITCH
UNDERHOOD FUSE BLOCK (ON RIGHT SIDE OF ENGINE COMPARTMENT)
WINDSHIELD WIPER/ WASHER SWITCH
WINDSHIELD WIPER MOTOR
BODY CONTROL MODULE (BCM)
185797

Fig. 36: Power Distribution Circuit (3 of 4)

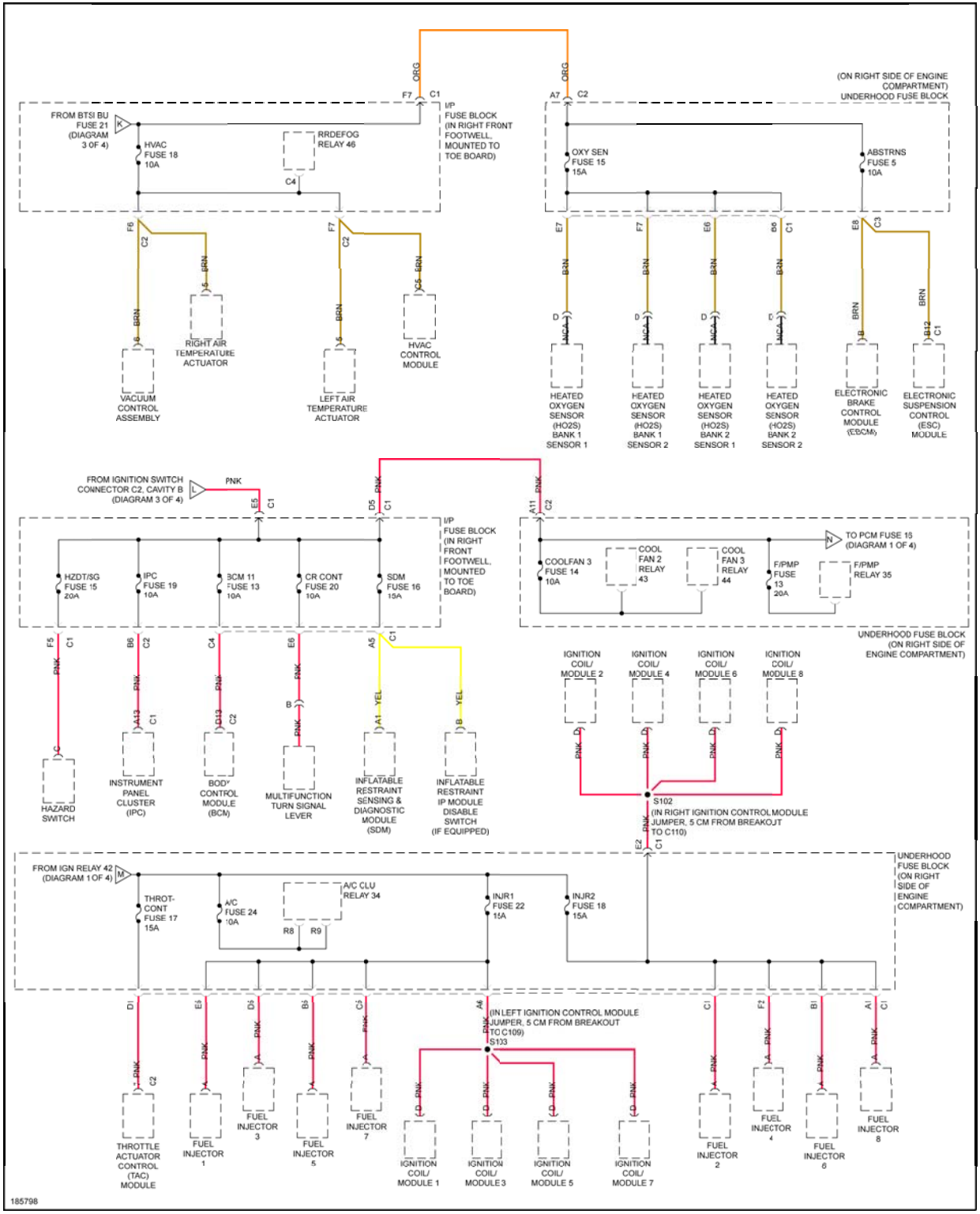
FROM BTSI BU FUSE 21 (DIAGRAM 3 OF 4)
HVAC FUSE 18 10A
RRDEFOG RELAY 46
I/P FUSE BLOCK (IN RIGHT FRONT FOOTWELL, MOUNTED TO TOE BOARD)
(ON RIGHT SIDE OF ENGINE COMPARTMENT) UNDERHOOD FUSE BLOCK
OXY SEN FUSE 15 15A
ABSTRNS FUSE 5 10A
VACUUM CONTROL ASSEMBLY
RIGHT AIR TEMPERATURE ACTUATOR
LEFT AIR TEMPERATURE ACTUATOR
HVAC CONTROL MODULE
HEATED OXYGEN SENSOR (HO2S) BANK 1 SENSOR 1
HEATED OXYGEN SENSOR (HO2S) BANK 1 SENSOR 2
HEATED OXYGEN SENSOR (HO2S) BANK 2 SENSOR 1
HEATED OXYGEN SENSOR (HO2S) BANK 2 SENSOR 2
ELECTRONIC BRAKE CONTROL MODULE (EBCM)
ELECTRONIC SUSPENSION CONTROL (ESC) MODULE
FROM IGNITION SWITCH CONNECTOR C2, CAVITY B (DIAGRAM 3 OF 4)
I/P FUSE BLOCK (IN RIGHT FRONT FOOTWELL, MOUNTED TO TOE BOARD)
HZDT/SG FUSE 15 20A
IPC FUSE 19 10A
BCM 11 FUSE 13 10A
CR CONT FUSE 20 10A
SDM FUSE 16 15A
TO PCM FUSE 15 (DIAGRAM 1 OF 4)
COOLFAN 3 FUSE 14 10A
COOL FAN 2 RELAY 43
COOL FAN 3 RELAY 44
F/PMP FUSE 13 20A
F/PMP RELAY 35
UNDERHOOD FUSE BLOCK (ON RIGHT SIDE OF ENGINE COMPARTMENT)
HAZARD SWITCH
INSTRUMENT PANEL CLUSTER (IPC)
BODY CONTROL MODULE (BCM)
MULTIFUNCTION TURN SIGNAL LEVER
INFLATABLE RESTRAINT SENSING & DIAGNOSTIC MODULE (SDM)
INFLATABLE RESTRAINT IP MODULE DISABLE SWITCH (IF EQUIPPED)
IGNITION COIL/ MODULE 2
IGNITION COIL/ MODULE 4
IGNITION COIL/ MODULE 6
IGNITION COIL/ MODULE 8
S102 (IN RIGHT IGNITION CONTROL MODULE JUMPER, 5 CM FROM BREAKOUT TO C110)
FROM IGN RELAY 42 (DIAGRAM 1 OF 4)
THROT-CONT FUSE 17 15A
A/C FUSE 24 10A
A/C CLU RELAY 34
INJR1 FUSE 22 15A
INJR2 FUSE 18 15A
UNDERHOOD FUSE BLOCK (ON RIGHT SIDE OF ENGINE COMPARTMENT)
(IN LEFT IGNITION CONTROL MODULE JUMPER, 5 CM FROM BREAKOUT TO C109) S103
THROTTLE ACTUATOR CONTROL (TAC) MODULE
FUEL INJECTOR 1
FUEL INJECTOR 3
FUEL INJECTOR 5
FUEL INJECTOR 7
IGNITION COIL/ MODULE 1
IGNITION COIL/ MODULE 3
IGNITION COIL/ MODULE 5
IGNITION COIL/ MODULE 7
FUEL INJECTOR 2
FUEL INJECTOR 4
FUEL INJECTOR 6
FUEL INJECTOR 8
185798

Fig. 37: Power Distribution Circuit (4 of 4)

POWER DOOR LOCKS

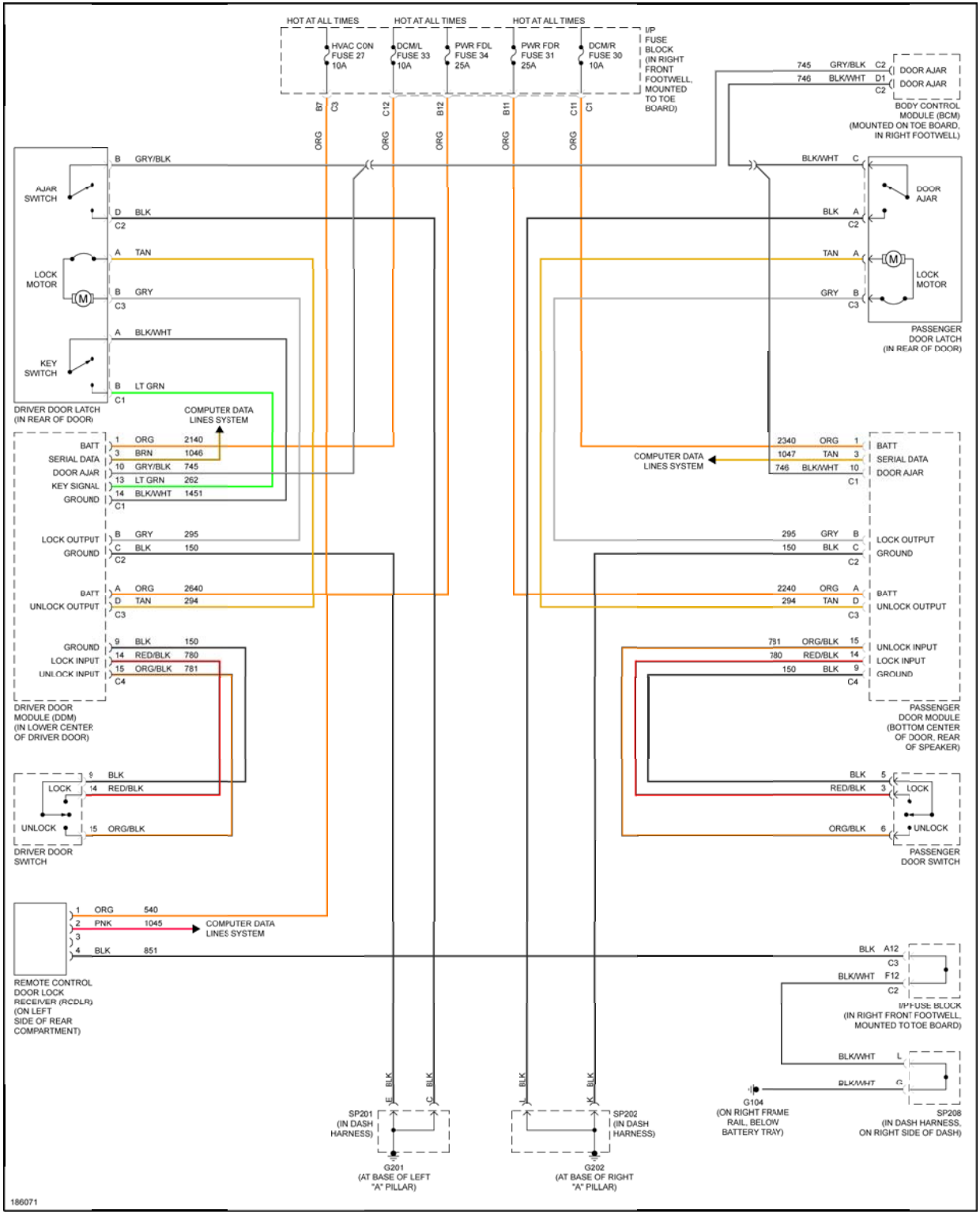
HOT AT ALL TIMES
HOT AT ALL TIMES
HOT AT ALL TIMES
HVAC CON FUSE 27 10A
DCM/L FUSE 33 10A
PWR FDL FUSE 34 25A
PWR FDR FUSE 31 25A
DCM/R FUSE 30 10A
I/P FUSE BLOCK (IN RIGHT FRONT FOOTWELL, MOUNTED TO TOE BOARD)
B7 C3 C12 B12 B11 C11 C1
ORG
745 GRY/BLK C2 DOOR AJAR
746 BLK/WHT D1 DOOR AJAR
C2
BODY CONTROL MODULE (BCM) (MOUNTED ON TOE BOARD, IN RIGHT FOOTWELL)
AJAR SWITCH
B GRY/BLK
D BLK
C2
LOCK MOTOR
A TAN
B GRY
C3
KEY SWITCH
A BLK/WHT
B LT GRN
C1
DRIVER DOOR LATCH (IN REAR OF DOOR)
BLK/WHT C
DOOR AJAR
BLK A
C2
TAN A
LOCK MOTOR
GRY B
C3
PASSENGER DOOR LATCH (IN REAR OF DOOR)
COMPUTER DATA LINES SYSTEM
BATT 1 ORG 2140
SERIAL DATA 3 BRN 1046
DOOR AJAR 10 GRY/BLK 745
KEY SIGNAL 13 LT GRN 262
GROUND 14 BLK/WHT 1451
C1
LOCK OUTPUT B GRY 295
GROUND C BLK 150
C2
BATT A ORG 2640
UNLOCK OUTPUT D TAN 294
C3
GROUND 9 BLK 150
LOCK INPUT 14 RED/BLK 780
UNLOCK INPUT 15 ORG/BLK 781
C4
DRIVER DOOR MODULE (DDM) (IN LOWER CENTER OF DRIVER DOOR)
2340 ORG 1 BATT
1047 TAN 3 SERIAL DATA
746 BLK/WHT 10 DOOR AJAR
C1
COMPUTER DATA LINES SYSTEM
295 GRY B LOCK OUTPUT
150 BLK C GROUND
C2
2240 ORG A BATT
294 TAN D UNLOCK OUTPUT
C3
781 ORG/BLK 15 UNLOCK INPUT
780 RED/BLK 14 LOCK INPUT
150 BLK 9 GROUND
C4
PASSENGER DOOR MODULE (BOTTOM CENTER OF DOOR, REAR OF SPEAKER)
LOCK 9 BLK
14 RED/BLK
UNLOCK 15 ORG/BLK
DRIVER DOOR SWITCH
BLK 5
RED/BLK 3 LOCK
ORG/BLK 6 UNLOCK
PASSENGER DOOR SWITCH
1 ORG 540
2 PNK 1045
3
4 BLK 851
COMPUTER DATA LINES SYSTEM
REMOTE CONTROL DOOR LOCK RECEIVER (RCDLR) (ON LEFT SIDE OF REAR COMPARTMENT)
BLK A12
C3
BLK/WHT F12
C2
I/P FUSE BLOCK (IN RIGHT FRONT FOOTWELL, MOUNTED TO TOE BOARD)
BLK/WHT L
BLK/WHT G
E BLK
C BLK
J BLK
K BLK
SP201 (IN DASH HARNESS)
SP202 (IN DASH HARNESS)
G104 (ON RIGHT FRAME RAIL, BELOW BATTERY TRAY)
SP208 (IN DASH HARNESS, ON RIGHT SIDE OF DASH)
G201 (AT BASE OF LEFT "A" PILLAR)
G202 (AT BASE OF RIGHT "A" PILLAR)
186071

Fig. 38: Power Door Locks Circuit

POWER MIRRORS

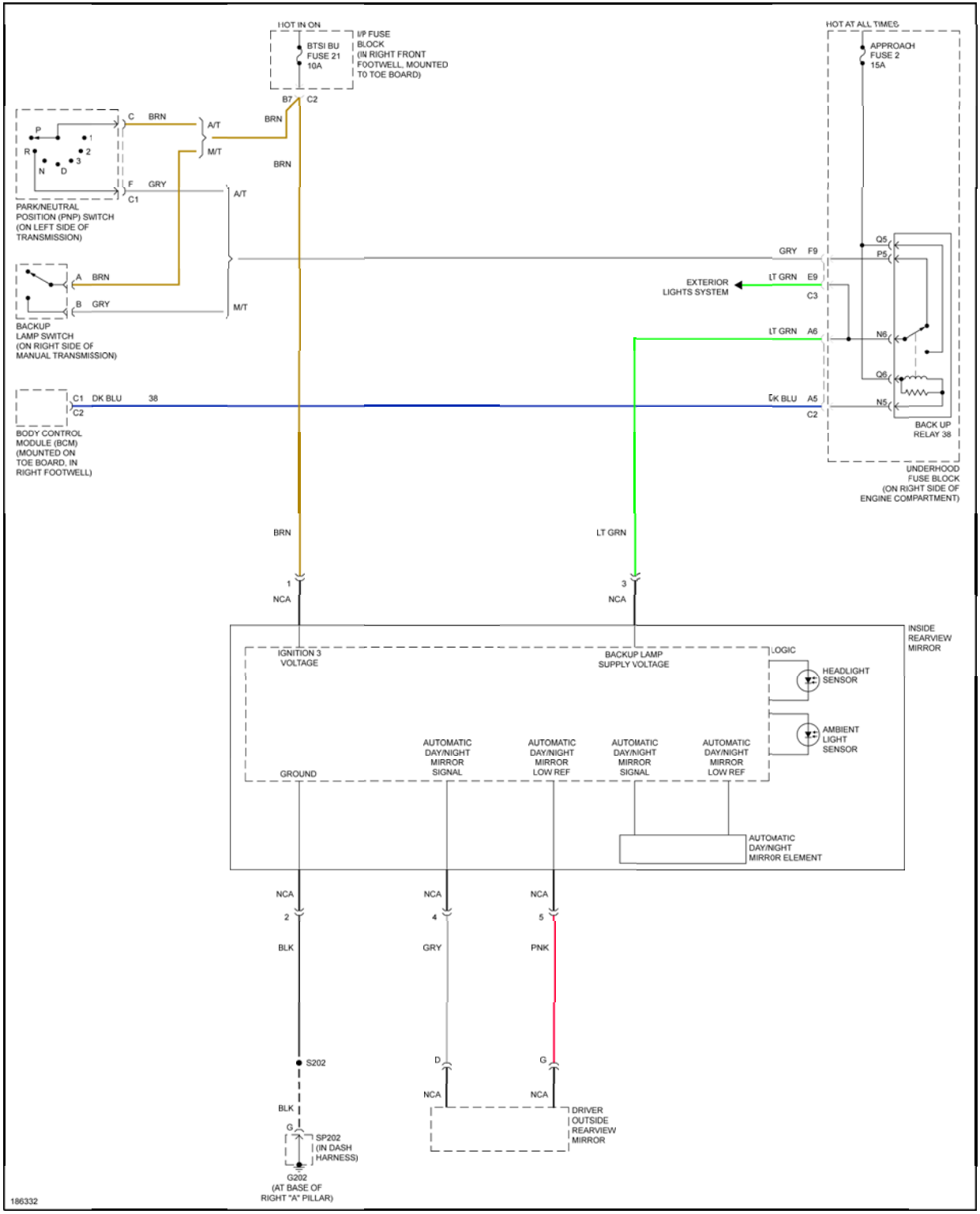
HOT IN ON
BTSI BU FUSE 21 10A
I/P FUSE BLOCK (IN RIGHT FRONT FOOTWELL, MOUNTED TO TOE BOARD)
B7
C2
HOT AT ALL TIMES
APPROACH FUSE 2 15A
PARK/NEUTRAL POSITION (PNP) SWITCH (ON LEFT SIDE OF TRANSMISSION)
P
R
N
D
1
2
3
C
BRN
A/T
M/T
F
GRY
C1
BRN
BRN
A/T
BACKUP LAMP SWITCH (ON RIGHT SIDE OF MANUAL TRANSMISSION)
A
BRN
B
GRY
M/T
GRY
F9
Q5
P5
EXTERIOR LIGHTS SYSTEM
LT GRN
E9
C3
LT GRN
A6
N6
Q6
N5
BODY CONTROL MODULE (BCM) (MOUNTED ON TOE BOARD, IN RIGHT FOOTWELL)
C1
DK BLU
38
C2
DK BLU
A5
C2
BACK UP RELAY 38
UNDERHOOD FUSE BLOCK (ON RIGHT SIDE OF ENGINE COMPARTMENT)
BRN
LT GRN
1
NCA
3
NCA
INSIDE REARVIEW MIRROR
IGNITION 3 VOLTAGE
BACKUP LAMP SUPPLY VOLTAGE
LOGIC
HEADLIGHT SENSOR
AMBIENT LIGHT SENSOR
GROUND
AUTOMATIC DAY/NIGHT MIRROR SIGNAL
AUTOMATIC DAY/NIGHT MIRROR LOW REF
AUTOMATIC DAY/NIGHT MIRROR SIGNAL
AUTOMATIC DAY/NIGHT MIRROR LOW REF
AUTOMATIC DAY/NIGHT MIRROR ELEMENT
NCA
2
BLK
NCA
4
GRY
NCA
5
PNK
S202
D
G
NCA
NCA
BLK
G
SP202 (IN DASH HARNESS)
DRIVER OUTSIDE REARVIEW MIRROR
G202 (AT BASE OF RIGHT "A" PILLAR)
186332

Fig. 39: Electrochromic Mirror Circuit

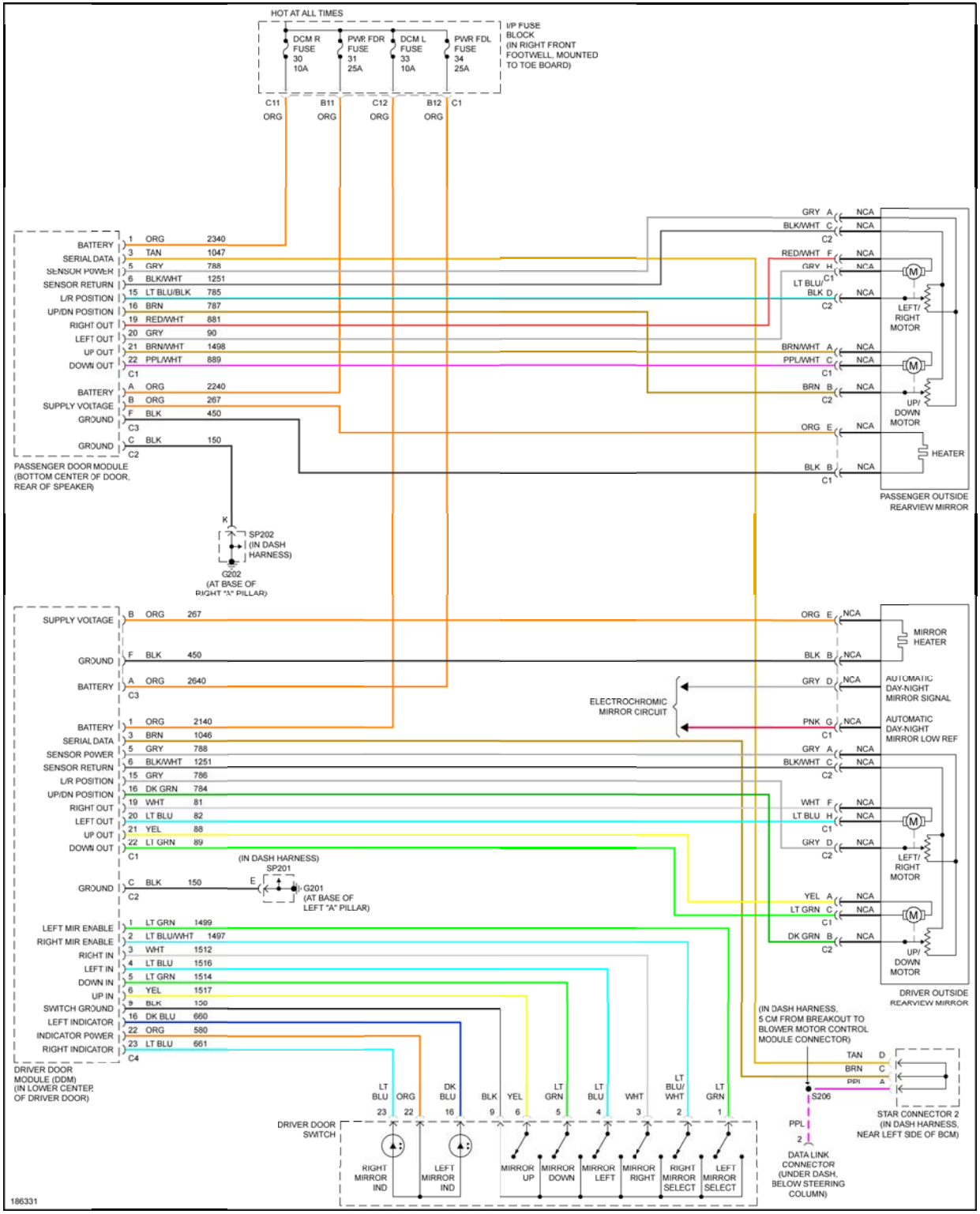
HOT AT ALL TIMES
DCM R FUSE 30 10A
PWR FDR FUSE 31 25A
DCM L FUSE 33 10A
PWR FDL FUSE 34 25A
I/P FUSE BLOCK (IN RIGHT FRONT FOOTWELL, MOUNTED TO TOE BOARD)
C11 ORG
B11 ORG
C12 ORG
B12 ORG
C1
BATTERY 1 ORG 2340
SERIAL DATA 3 TAN 1047
SENSOR POWER 5 GRY 788
SENSOR RETURN 6 BLK/WHT 1251
L/R POSITION 15 LT BLU/BLK 785
UP/DN POSITION 16 BRN 787
RIGHT OUT 19 RED/WHT 881
LEFT OUT 20 GRY 90
UP OUT 21 BRN/WHT 1498
DOWN OUT 22 PPL/WHT 889
C1
BATTERY A ORG 2240
SUPPLY VOLTAGE B ORG 267
GROUND F BLK 450
C3
GROUND C BLK 150
C2
PASSENGER DOOR MODULE (BOTTOM CENTER OF DOOR, REAR OF SPEAKER)
K
SP202 (IN DASH HARNESS)
G202 (AT BASE OF RIGHT "A" PILLAR)
GRY A NCA
BLK/WHT C NCA
C2
RED/WHT F NCA
GRY H NCA
C1
LT BLU/BLK D NCA
C2
LEFT/ RIGHT MOTOR
BRN/WHT A NCA
PPL/WHT C NCA
C1
BRN B NCA
C2
UP/ DOWN MOTOR
ORG E NCA
HEATER
BLK B NCA
C1
PASSENGER OUTSIDE REARVIEW MIRROR
SUPPLY VOLTAGE B ORG 267
GROUND F BLK 450
BATTERY A ORG 2640
C3
BATTERY 1 ORG 2140
SERIAL DATA 3 BRN 1046
SENSOR POWER 5 GRY 788
SENSOR RETURN 6 BLK/WHT 1251
L/R POSITION 15 GRY 786
UP/DN POSITION 16 DK GRN 784
RIGHT OUT 19 WHT 81
LEFT OUT 20 LT BLU 82
UP OUT 21 YEL 88
DOWN OUT 22 LT GRN 89
C1
GROUND C BLK 150
C2
(IN DASH HARNESS) SP201
E
G201 (AT BASE OF LEFT "A" PILLAR)
LEFT MIR ENABLE 1 LT GRN 1499
RIGHT MIR ENABLE 2 LT BLU/WHT 1497
RIGHT IN 3 WHT 1512
LEFT IN 4 LT BLU 1516
DOWN IN 5 LT GRN 1514
UP IN 6 YEL 1517
SWITCH GROUND 9 BLK 150
LEFT INDICATOR 16 DK BLU 660
INDICATOR POWER 22 ORG 580
RIGHT INDICATOR 23 LT BLU 661
C4
DRIVER DOOR MODULE (DDM) (IN LOWER CENTER OF DRIVER DOOR)
ORG E NCA
MIRROR HEATER
BLK B NCA
GRY D NCA
AUTOMATIC DAY-NIGHT MIRROR SIGNAL
ELECTROCHROMIC MIRROR CIRCUIT
PNK G NCA
C1
AUTOMATIC DAY-NIGHT MIRROR LOW REF
GRY A NCA
BLK/WHT C NCA
C2
WHT F NCA
LT BLU H NCA
C1
GRY D NCA
C2
LEFT/ RIGHT MOTOR
YEL A NCA
LT GRN C NCA
C1
DK GRN B NCA
C2
UP/ DOWN MOTOR
DRIVER OUTSIDE REARVIEW MIRROR
(IN DASH HARNESS, 5 CM FROM BREAKOUT TO BLOWER MOTOR CONTROL MODULE CONNECTOR)
TAN D
BRN C
PPL A
S206
STAR CONNECTOR 2 (IN DASH HARNESS, NEAR LEFT SIDE OF BCM)
PPL
2
DATA LINK CONNECTOR (UNDER DASH, BELOW STEERING COLUMN)
LT BLU 23
ORG 22
DK BLU 16
BLK 9
YEL 6
LT GRN 5
LT BLU 4
WHT 3
LT BLU/ WHT 2
LT GRN 1
DRIVER DOOR SWITCH
RIGHT MIRROR IND
LEFT MIRROR IND
MIRROR UP
MIRROR DOWN
MIRROR LEFT
MIRROR RIGHT
RIGHT MIRROR SELECT
LEFT MIRROR SELECT
186331

Fig. 40: Power Mirrors Circuit

POWER SEATS

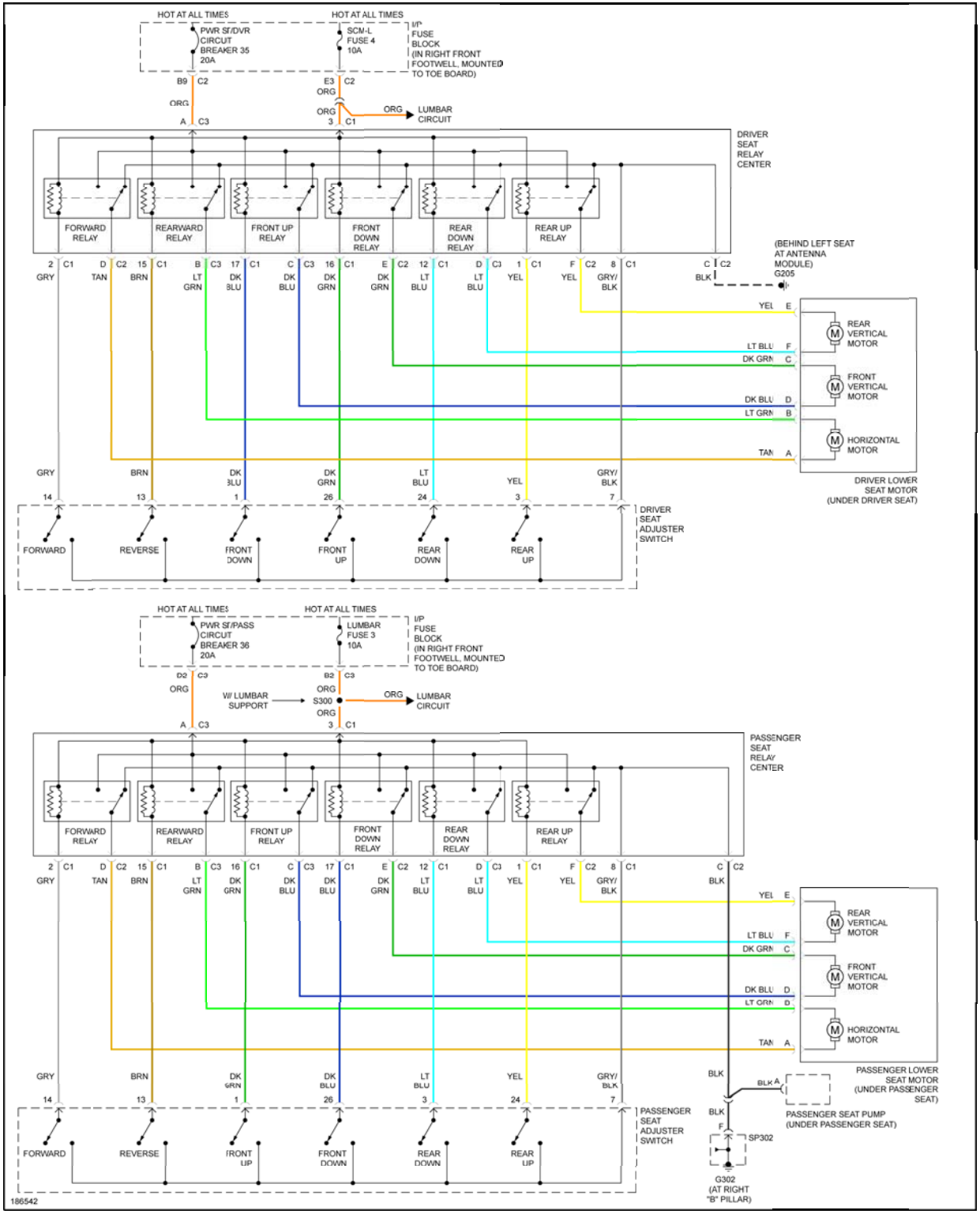
HOT AT ALL TIMES
PWR SF/DVR CIRCUIT BREAKER 35 20A
HOT AT ALL TIMES
SCM-L FUSE 4 10A
I/P FUSE BLOCK (IN RIGHT FRONT FOOTWELL, MOUNTED TO TOE BOARD)
B9 C2
ORG
A C3
E3 C2
ORG
ORG 3 C1
ORG
LUMBAR CIRCUIT
DRIVER SEAT RELAY CENTER
FORWARD RELAY
REARWARD RELAY
FRONT UP RELAY
FRONT DOWN RELAY
REAR DOWN RELAY
REAR UP RELAY
(BEHIND LEFT SEAT AT ANTENNA MODULE) G205
2 C1 GRY
D C2 TAN
15 C1 BRN
B LT GRN
C3 17 DK BLU
C DK BLU
C3 16 DK GRN
E DK GRN
C2 12 LT BLU
D LT BLU
C3 1 YEL
F YEL
C2 8 GRY/BLK
C C2 BLK
YEL E
LT BLU F
DK GRN C
DK BLU D
LT GRN B
TAN A
REAR VERTICAL MOTOR
FRONT VERTICAL MOTOR
HORIZONTAL MOTOR
DRIVER LOWER SEAT MOTOR (UNDER DRIVER SEAT)
GRY 14
BRN 13
DK BLU 1
DK GRN 26
LT BLU 24
YEL 3
GRY/BLK 7
DRIVER SEAT ADJUSTER SWITCH
FORWARD
REVERSE
FRONT DOWN
FRONT UP
REAR DOWN
REAR UP
HOT AT ALL TIMES
PWR SF/PASS CIRCUIT BREAKER 36 20A
HOT AT ALL TIMES
LUMBAR FUSE 3 10A
I/P FUSE BLOCK (IN RIGHT FRONT FOOTWELL, MOUNTED TO TOE BOARD)
B2 C3
ORG
A C3
W/ LUMBAR SUPPORT
B2 C3
ORG
S300
ORG
3 C1
ORG
LUMBAR CIRCUIT
PASSENGER SEAT RELAY CENTER
FORWARD RELAY
REARWARD RELAY
FRONT UP RELAY
FRONT DOWN RELAY
REAR DOWN RELAY
REAR UP RELAY
2 C1 GRY
D C2 TAN
15 C1 BRN
B LT GRN
C3 16 DK GRN
C DK BLU
C3 17 DK BLU
E DK GRN
C2 12 LT BLU
D LT BLU
C3 1 YEL
F YEL
C2 8 GRY/BLK
C1
C C2 BLK
YEL E
LT BLU F
DK GRN C
DK BLU D
LT GRN B
TAN A
REAR VERTICAL MOTOR
FRONT VERTICAL MOTOR
HORIZONTAL MOTOR
PASSENGER LOWER SEAT MOTOR (UNDER PASSENGER SEAT)
GRY 14
BRN 13
DK GRN 1
DK BLU 26
LT BLU 3
YEL 24
GRY/BLK 7
BLK
BLK A
PASSENGER SEAT PUMP (UNDER PASSENGER SEAT)
BLK F
SP302
G302 (AT RIGHT "B" PILLAR)
PASSENGER SEAT ADJUSTER SWITCH
FORWARD
REVERSE
FRONT UP
FRONT DOWN
REAR DOWN
REAR UP
186542

Fig. 41: 6-Way Power Seat Circuit

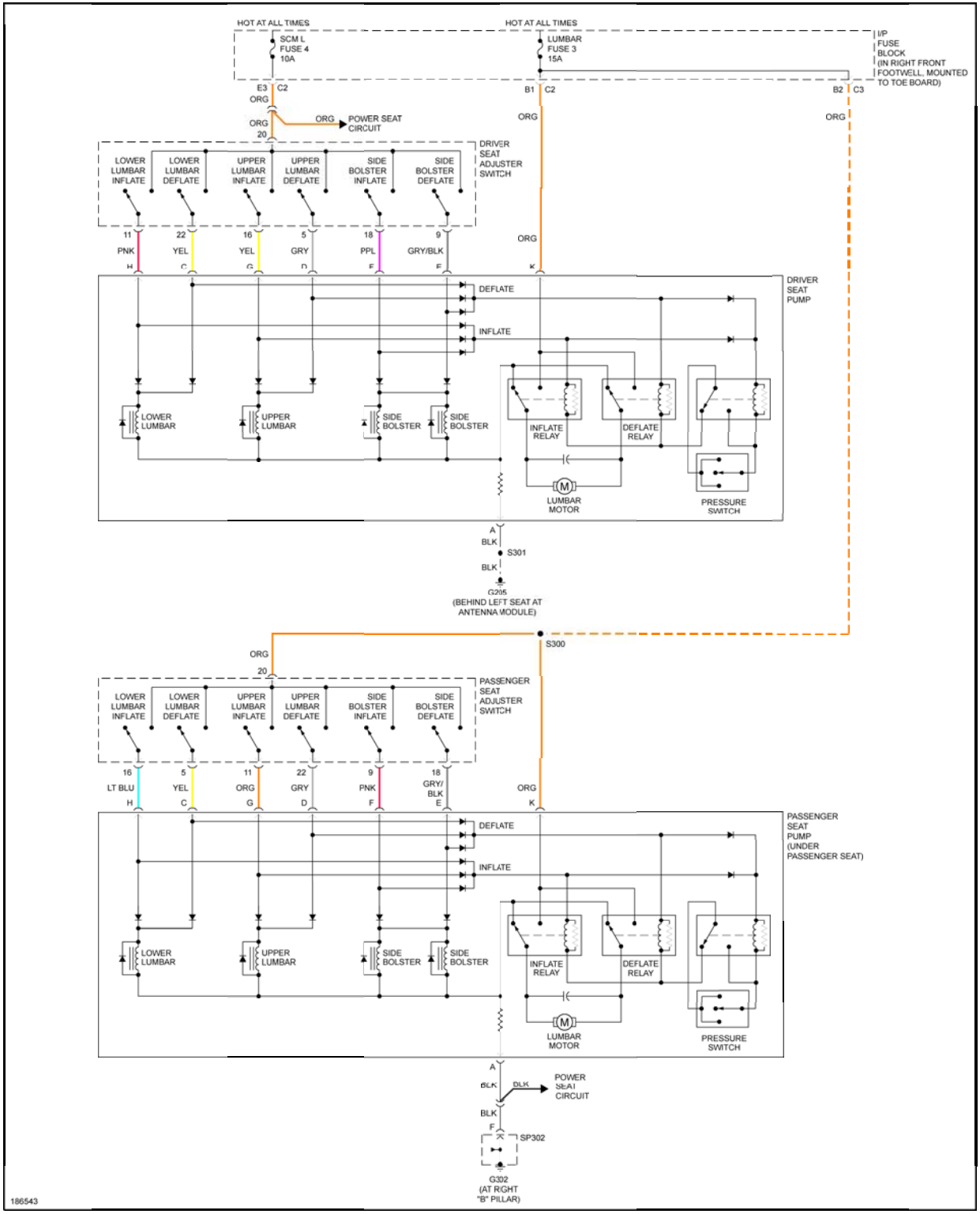
HOT AT ALL TIMES
SCM L FUSE 4 10A
HOT AT ALL TIMES
LUMBAR FUSE 3 15A
I/P FUSE BLOCK (IN RIGHT FRONT FOOTWELL, MOUNTED TO TOE BOARD)
E3 C2
B1 C2
B2 C3
ORG
ORG
POWER SEAT CIRCUIT
20
DRIVER SEAT ADJUSTER SWITCH
LOWER LUMBAR INFLATE
LOWER LUMBAR DEFLATE
UPPER LUMBAR INFLATE
UPPER LUMBAR DEFLATE
SIDE BOLSTER INFLATE
SIDE BOLSTER DEFLATE
11 PNK H
22 YEL C
16 YEL G
5 GRY D
18 PPL F
9 GRY/BLK E
DRIVER SEAT PUMP
DEFLATE
INFLATE
LOWER LUMBAR
UPPER LUMBAR
SIDE BOLSTER
SIDE BOLSTER
INFLATE RELAY
DEFLATE RELAY
LUMBAR MOTOR
PRESSURE SWITCH
A
BLK
S301
G295 (BEHIND LEFT SEAT AT ANTENNA MODULE)
S300
PASSENGER SEAT ADJUSTER SWITCH
16 LT BLU H
5 YEL C
11 ORG G
22 GRY D
9 PNK F
18 GRY/BLK E
PASSENGER SEAT PUMP (UNDER PASSENGER SEAT)
POWER SEAT CIRCUIT
SP302
G302 (AT RIGHT "B" PILLAR)
186543

Fig. 42: Lumbar Circuit

POWER WINDOWS

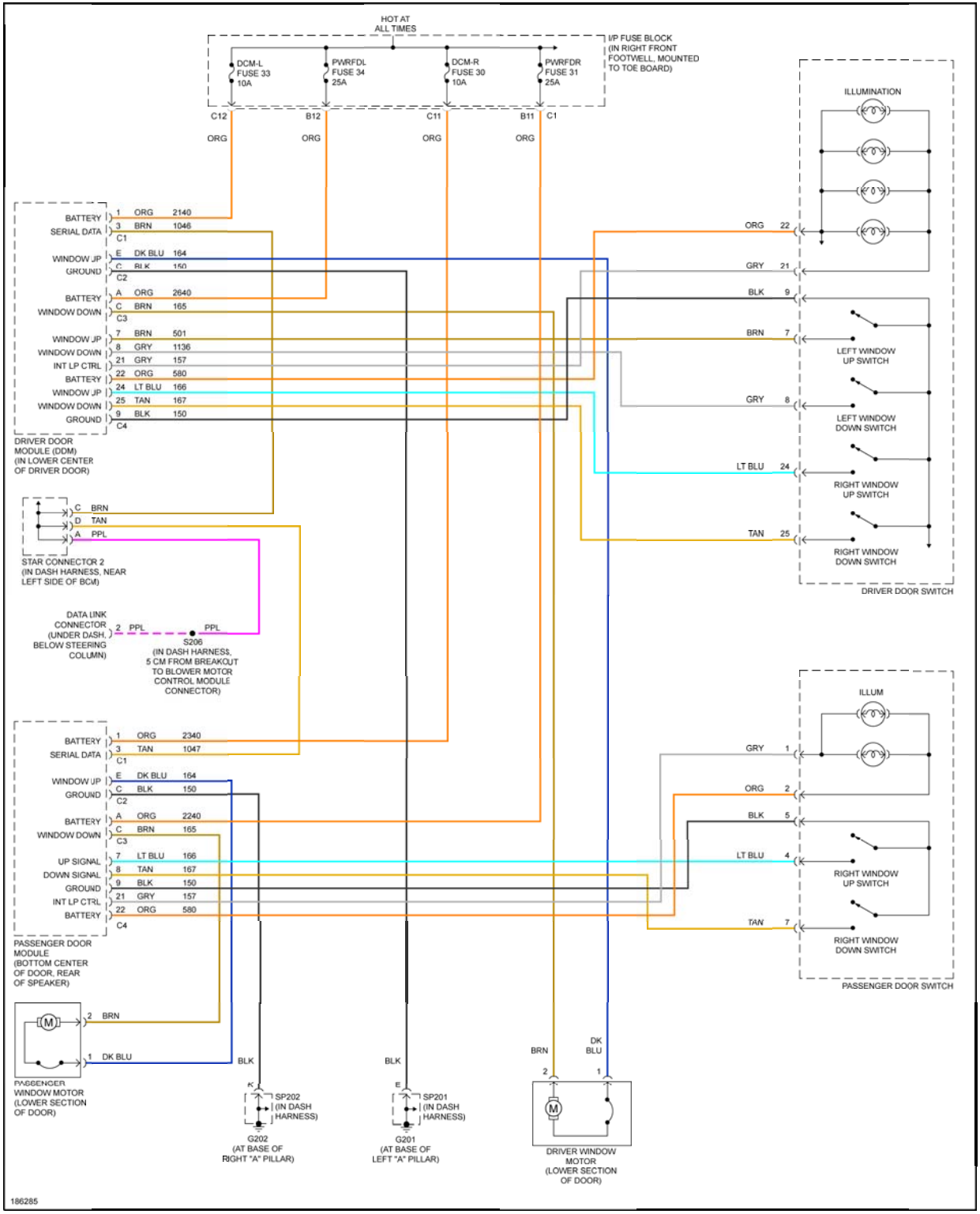
HOT AT ALL TIMES
I/P FUSE BLOCK (IN RIGHT FRONT FOOTWELL, MOUNTED TO TOE BOARD)
DCM-L FUSE 33 10A
PWRFDL FUSE 34 25A
DCM-R FUSE 30 10A
PWRFDR FUSE 31 25A
C12 ORG
B12 ORG
C11 ORG
B11 ORG C1
BATTERY 1 ORG 2140
SERIAL DATA 3 BRN 1046
C1
WINDOW UP E DK BLU 164
GROUND C BLK 150
C2
BATTERY A ORG 2640
WINDOW DOWN C BRN 165
C3
WINDOW UP 7 BRN 501
WINDOW DOWN 8 GRY 1136
INT LP CTRL 21 GRY 157
BATTERY 22 ORG 580
WINDOW UP 24 LT BLU 166
WINDOW DOWN 25 TAN 167
GROUND 9 BLK 150
C4
DRIVER DOOR MODULE (DDM) (IN LOWER CENTER OF DRIVER DOOR)
C BRN
D TAN
A PPL
STAR CONNECTOR 2 (IN DASH HARNESS, NEAR LEFT SIDE OF BCM)
DATA LINK CONNECTOR (UNDER DASH, BELOW STEERING COLUMN)
2 PPL
PPL
S206 (IN DASH HARNESS, 5 CM FROM BREAKOUT TO BLOWER MOTOR CONTROL MODULE CONNECTOR)
BATTERY 1 ORG 2340
SERIAL DATA 3 TAN 1047
C1
WINDOW UP E DK BLU 164
GROUND C BLK 150
C2
BATTERY A ORG 2240
WINDOW DOWN C BRN 165
C3
UP SIGNAL 7 LT BLU 166
DOWN SIGNAL 8 TAN 167
GROUND 9 BLK 150
INT LP CTRL 21 GRY 157
BATTERY 22 ORG 580
C4
PASSENGER DOOR MODULE (BOTTOM CENTER OF DOOR, REAR OF SPEAKER)
2 BRN
1 DK BLU
PASSENGER WINDOW MOTOR (LOWER SECTION OF DOOR)
BLK
K
SP202 (IN DASH HARNESS)
G202 (AT BASE OF RIGHT "A" PILLAR)
BLK
E
SP201 (IN DASH HARNESS)
G201 (AT BASE OF LEFT "A" PILLAR)
BRN
DK BLU
2
1
DRIVER WINDOW MOTOR (LOWER SECTION OF DOOR)
ILLUMINATION
ORG 22
GRY 21
BLK 9
BRN 7
LEFT WINDOW UP SWITCH
GRY 8
LEFT WINDOW DOWN SWITCH
LT BLU 24
RIGHT WINDOW UP SWITCH
TAN 25
RIGHT WINDOW DOWN SWITCH
DRIVER DOOR SWITCH
ILLUM
GRY 1
ORG 2
BLK 5
LT BLU 4
RIGHT WINDOW UP SWITCH
TAN 7
RIGHT WINDOW DOWN SWITCH
PASSENGER DOOR SWITCH
186285

Fig. 43: Power Windows Circuit

RADIO

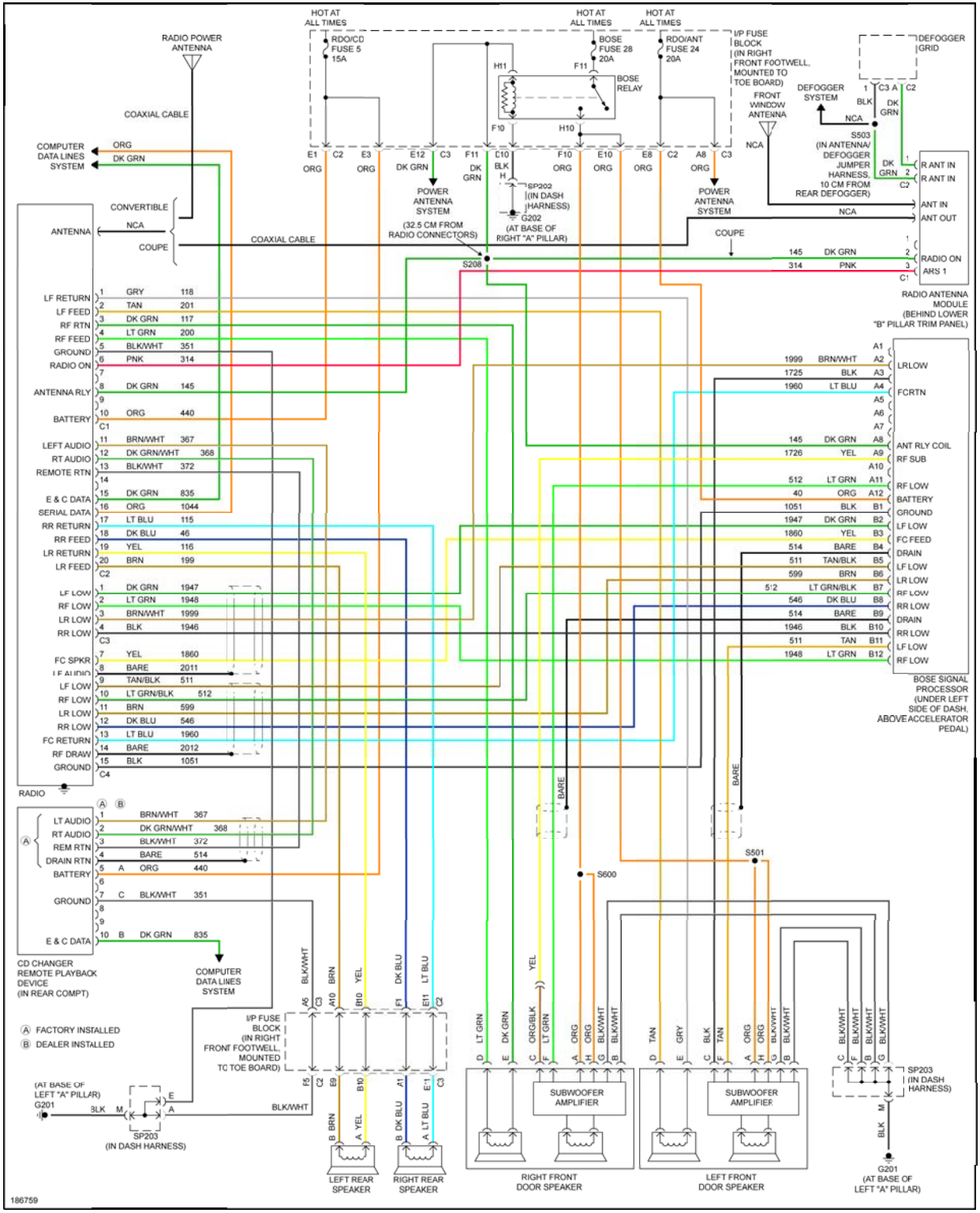
HOT AT ALL TIMES
RDO/CD FUSE 5 15A
BOSE FUSE 28 20A
RDO/ANT FUSE 24 20A
I/P FUSE BLOCK (IN RIGHT FRONT FOOTWELL, MOUNTED TO TOE BOARD)
BOSE RELAY
RADIO POWER ANTENNA
COAXIAL CABLE
COMPUTER DATA LINES SYSTEM
ORG
DK GRN
CONVERTIBLE
NCA
COUPE
ANTENNA
POWER ANTENNA SYSTEM
(32.5 CM FROM RADIO CONNECTORS)
SP202 (IN DASH HARNESS)
G202 (AT BASE OF RIGHT "A" PILLAR)
FRONT WINDOW ANTENNA
DEFOGGER SYSTEM
DEFOGGER GRID
S503 (IN ANTENNA/ DEFOGGER JUMPER HARNESS, 10 CM FROM REAR DEFOGGER)
R ANT IN
ANT IN
ANT OUT
RADIO ON
ARS 1
RADIO ANTENNA MODULE (BEHIND LOWER "B" PILLAR TRIM PANEL)
LF RETURN
LF FEED
RF RTN
RF FEED
GROUND
RADIO ON
ANTENNA RLY
BATTERY
LEFT AUDIO
RT AUDIO
REMOTE RTN
E & C DATA
SERIAL DATA
RR RETURN
RR FEED
LR RETURN
LR FEED
LF LOW
RF LOW
LR LOW
RR LOW
FC SPKR
LF AUDIO
FC RETURN
RF DRAW
RADIO
LRLOW
FCRTN
ANT RLY COIL
RF SUB
RF LOW
BATTERY
GROUND
LF LOW
FC FEED
DRAIN
BOSE SIGNAL PROCESSOR (UNDER LEFT SIDE OF DASH, ABOVE ACCELERATOR PEDAL)
LT AUDIO
RT AUDIO
REM RTN
DRAIN RTN
CD CHANGER REMOTE PLAYBACK DEVICE (IN REAR COMPT)
COMPUTER DATA LINES SYSTEM
FACTORY INSTALLED
DEALER INSTALLED
I/P FUSE BLOCK (IN RIGHT FRONT FOOTWELL, MOUNTED TO TOE BOARD)
(AT BASE OF LEFT "A" PILLAR) G201
SP203 (IN DASH HARNESS)
S600
S501
SUBWOOFER AMPLIFIER
LEFT REAR SPEAKER
RIGHT REAR SPEAKER
RIGHT FRONT DOOR SPEAKER
LEFT FRONT DOOR SPEAKER
G201 (AT BASE OF LEFT "A" PILLAR)
186759

Fig. 44: Radio Circuit

SHIFT INTERLOCK

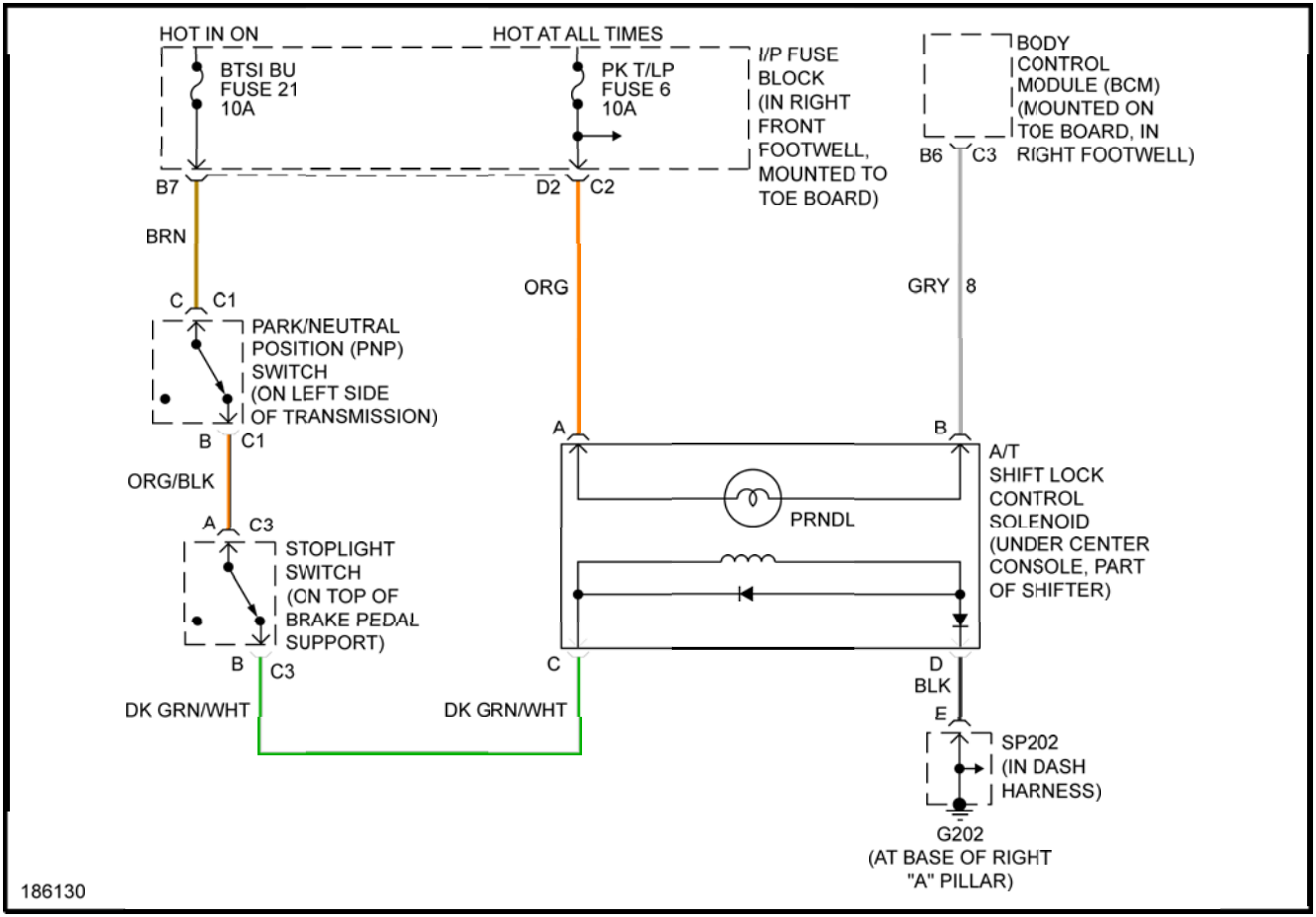
HOT IN ON
HOT AT ALL TIMES
BTSI BU
FUSE 21
10A
PK T/LP
FUSE 6
10A
I/P FUSE
BLOCK
(IN RIGHT
FRONT
FOOTWELL,
MOUNTED TO
TOE BOARD)
BODY
CONTROL
MODULE (BCM)
(MOUNTED ON
TOE BOARD, IN
RIGHT FOOTWELL)
B6
C3
B7
D2
C2
BRN
ORG
GRY
8
C
C1
PARK/NEUTRAL
POSITION (PNP)
SWITCH
(ON LEFT SIDE
OF TRANSMISSION)
B
C1
A
B
A/T
SHIFT LOCK
CONTROL
SOLENOID
(UNDER CENTER
CONSOLE, PART
OF SHIFTER)
ORG/BLK
PRNDL
A
C3
STOPLIGHT
SWITCH
(ON TOP OF
BRAKE PEDAL
SUPPORT)
B
C3
C
D
BLK
DK GRN/WHT
DK GRN/WHT
E
SP202
(IN DASH
HARNESS)
G202
(AT BASE OF RIGHT
"A" PILLAR)
186130

Fig. 45: Shift Interlock Circuit

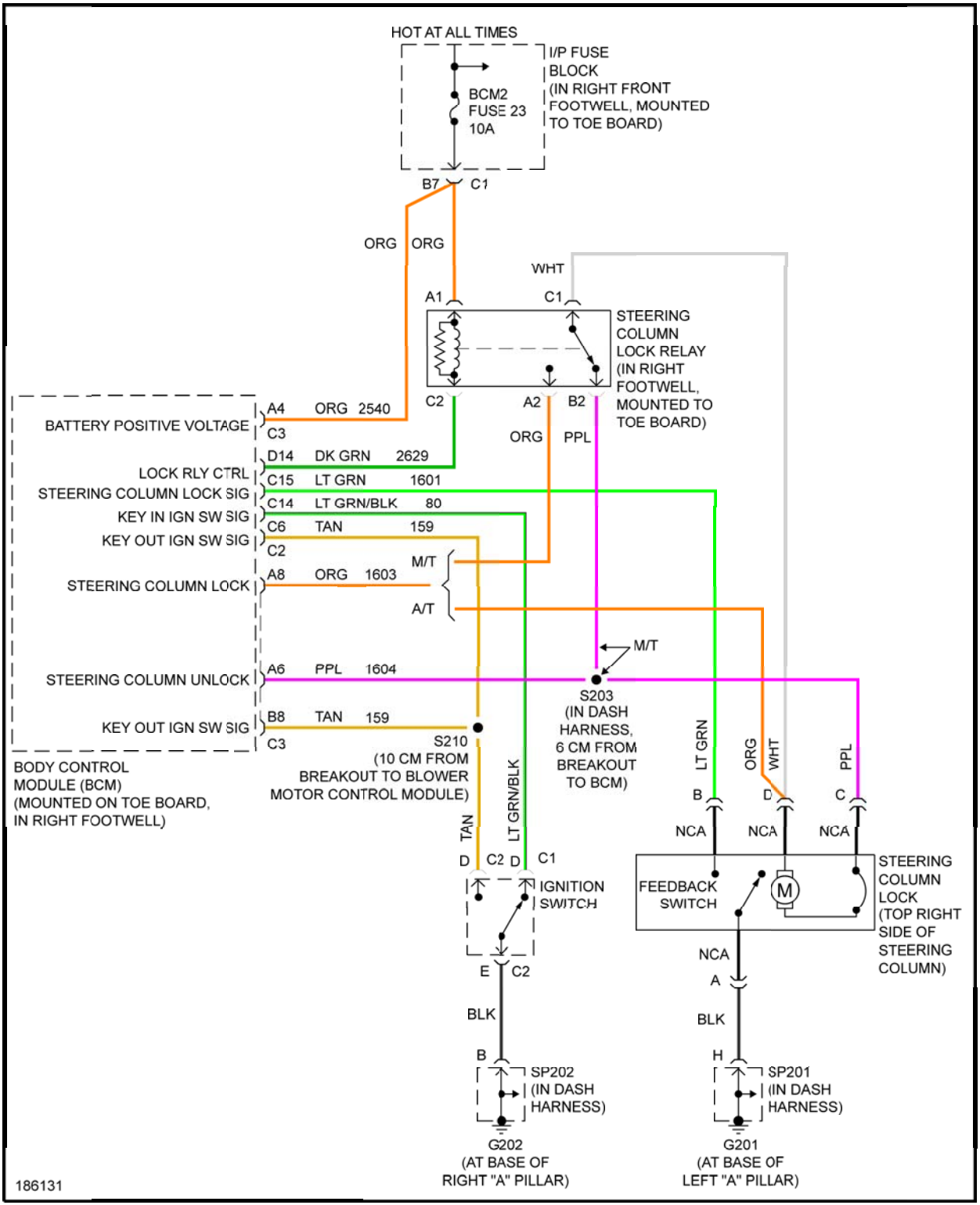
HOT AT ALL TIMES
I/P FUSE BLOCK (IN RIGHT FRONT FOOTWELL, MOUNTED TO TOE BOARD)
BCM2 FUSE 23 10A
B7
C1
ORG
ORG
WHT
A1
C1
STEERING COLUMN LOCK RELAY (IN RIGHT FOOTWELL, MOUNTED TO TOE BOARD)
C2
A2
B2
ORG
PPL
BATTERY POSITIVE VOLTAGE
A4 ORG 2540
C3
D14 DK GRN 2629
LOCK RLY CTRL
C15 LT GRN 1601
STEERING COLUMN LOCK SIG
C14 LT GRN/BLK 80
KEY IN IGN SW SIG
C6 TAN 159
KEY OUT IGN SW SIG
C2
M/T
A8 ORG 1603
STEERING COLUMN LOCK
A/T
M/T
A6 PPL 1604
STEERING COLUMN UNLOCK
S203 (IN DASH HARNESS, 6 CM FROM BREAKOUT TO BCM)
B8 TAN 159
KEY OUT IGN SW SIG
C3
S210 (10 CM FROM BREAKOUT TO BLOWER MOTOR CONTROL MODULE)
BODY CONTROL MODULE (BCM) (MOUNTED ON TOE BOARD, IN RIGHT FOOTWELL)
TAN
LT GRN/BLK
LT GRN
ORG
WHT
PPL
B
D
C
NCA
NCA
NCA
D
C2
D
C1
IGNITION SWITCH
FEEDBACK SWITCH
M
STEERING COLUMN LOCK (TOP RIGHT SIDE OF STEERING COLUMN)
NCA
A
E
C2
BLK
BLK
B
H
SP202 (IN DASH HARNESS)
SP201 (IN DASH HARNESS)
G202 (AT BASE OF RIGHT "A" PILLAR)
G201 (AT BASE OF LEFT "A" PILLAR)
186131

Fig. 46: Steering Column Circuit

STARTING/CHARGING

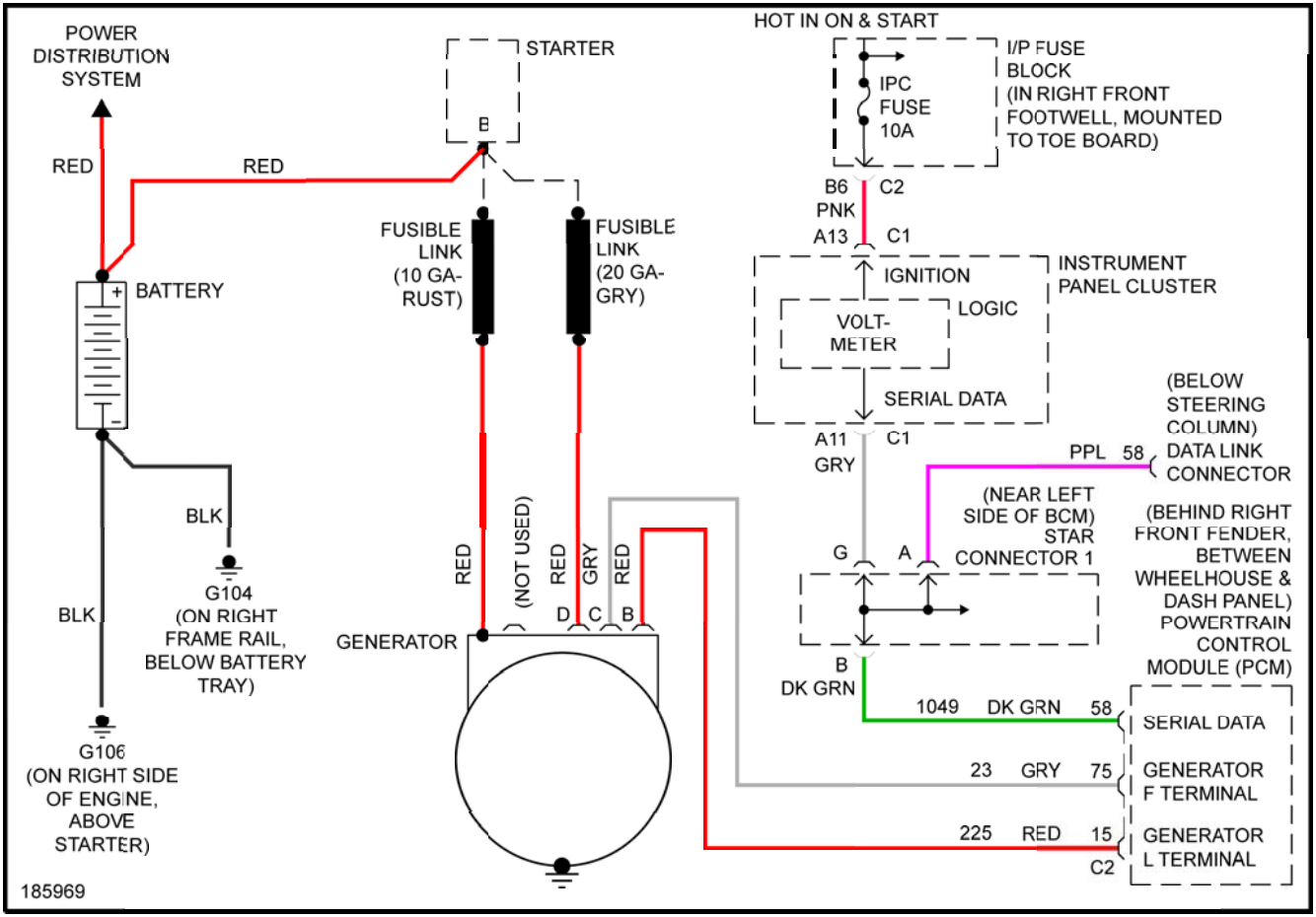
POWER DISTRIBUTION SYSTEM
RED
RED
BATTERY
BLK
BLK
G104 (ON RIGHT FRAME RAIL, BELOW BATTERY TRAY)
G106 (ON RIGHT SIDE OF ENGINE, ABOVE STARTER)
STARTER
B
FUSIBLE LINK (10 GA-RUST)
FUSIBLE LINK (20 GA-GRY)
RED
(NOT USED)
RED
GRY
RED
GENERATOR
D
C
B
HOT IN ON & START
I/P FUSE BLOCK (IN RIGHT FRONT FOOTWELL, MOUNTED TO TOE BOARD)
IPC FUSE 10A
B6
C2
PNK
A13
C1
INSTRUMENT PANEL CLUSTER
IGNITION
LOGIC
VOLT-METER
SERIAL DATA
A11
C1
GRY
PPL
58
(BELOW STEERING COLUMN) DATA LINK CONNECTOR
(NEAR LEFT SIDE OF BCM) STAR CONNECTOR 1
G
A
(BEHIND RIGHT FRONT FENDER, BETWEEN WHEELHOUSE & DASH PANEL) POWERTRAIN CONTROL MODULE (PCM)
B
DK GRN
1049
DK GRN
58
SERIAL DATA
23
GRY
75
GENERATOR F TERMINAL
225
RED
15
C2
GENERATOR L TERMINAL
185969

Fig. 47: Charging Circuit

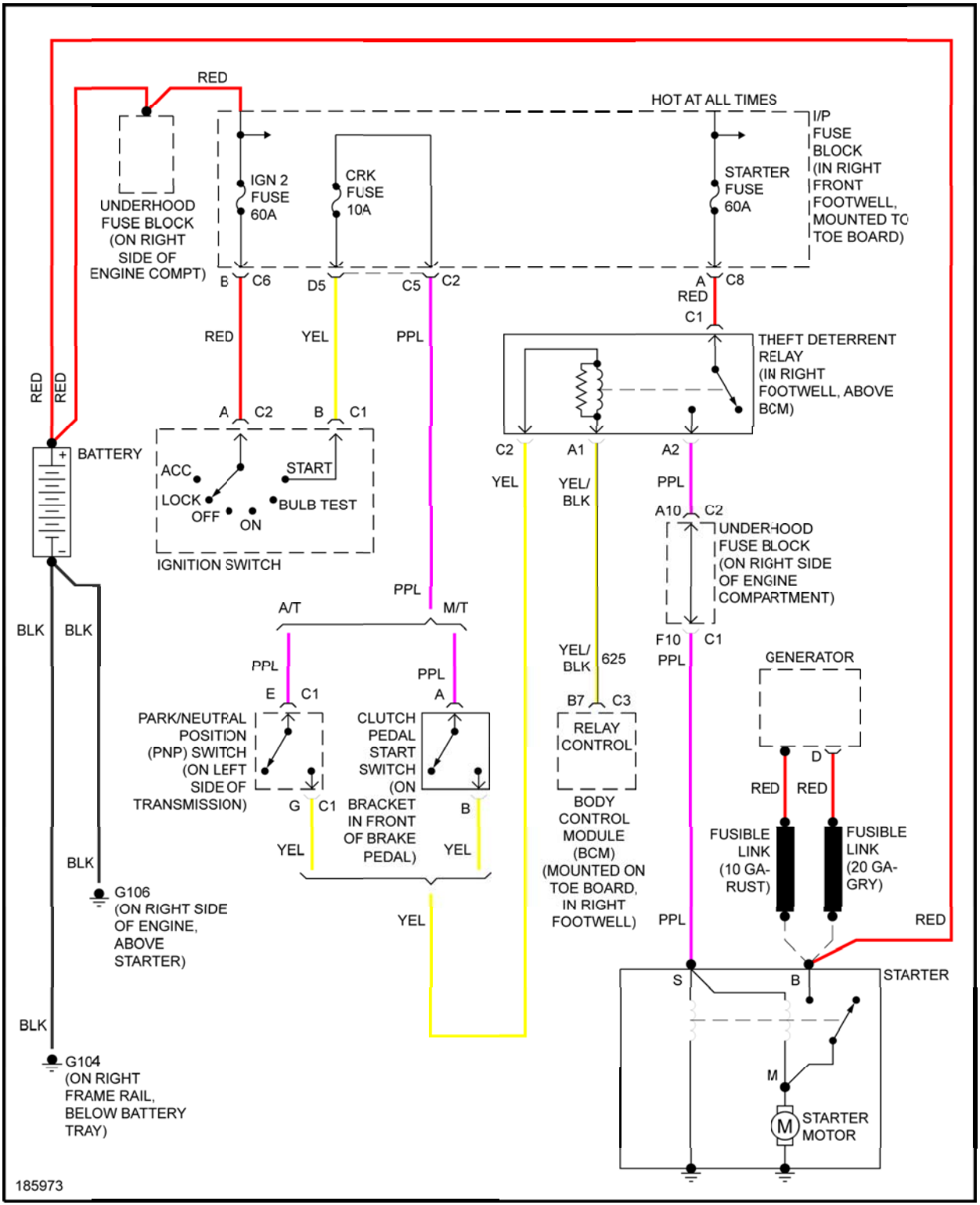
RED
HOT AT ALL TIMES
I/P FUSE BLOCK (IN RIGHT FRONT FOOTWELL, MOUNTED TO TOE BOARD)
UNDERHOOD FUSE BLOCK (ON RIGHT SIDE OF ENGINE COMPT)
IGN 2 FUSE 60A
CRK FUSE 10A
STARTER FUSE 60A
B C6
D5
C5 C2
A C8
RED
C1
RED
YEL
PPL
THEFT DETERRENT RELAY (IN RIGHT FOOTWELL, ABOVE BCM)
RED
RED
A C2
B C1
BATTERY
ACC
START
LOCK
OFF
ON
BULB TEST
IGNITION SWITCH
C2
A1
A2
YEL
YEL/ BLK
PPL
A10 C2
UNDERHOOD FUSE BLOCK (ON RIGHT SIDE OF ENGINE COMPARTMENT)
PPL
A/T
M/T
BLK
BLK
F10 C1
YEL/ BLK
625
PPL
GENERATOR
PPL
PPL
E C1
A
B7 C3
PARK/NEUTRAL POSITION (PNP) SWITCH (ON LEFT SIDE OF TRANSMISSION)
CLUTCH PEDAL START SWITCH (ON BRACKET IN FRONT OF BRAKE PEDAL)
RELAY CONTROL
BODY CONTROL MODULE (BCM) (MOUNTED ON TOE BOARD, IN RIGHT FOOTWELL)
D
RED
RED
G C1
B
YEL
YEL
FUSIBLE LINK (10 GA-RUST)
FUSIBLE LINK (20 GA-GRY)
BLK
G106 (ON RIGHT SIDE OF ENGINE, ABOVE STARTER)
YEL
PPL
RED
S
B
STARTER
BLK
M
G104 (ON RIGHT FRAME RAIL, BELOW BATTERY TRAY)
STARTER MOTOR
185973

Fig. 48: Starting Circuit

SUPPLEMENTAL RESTRAINTS

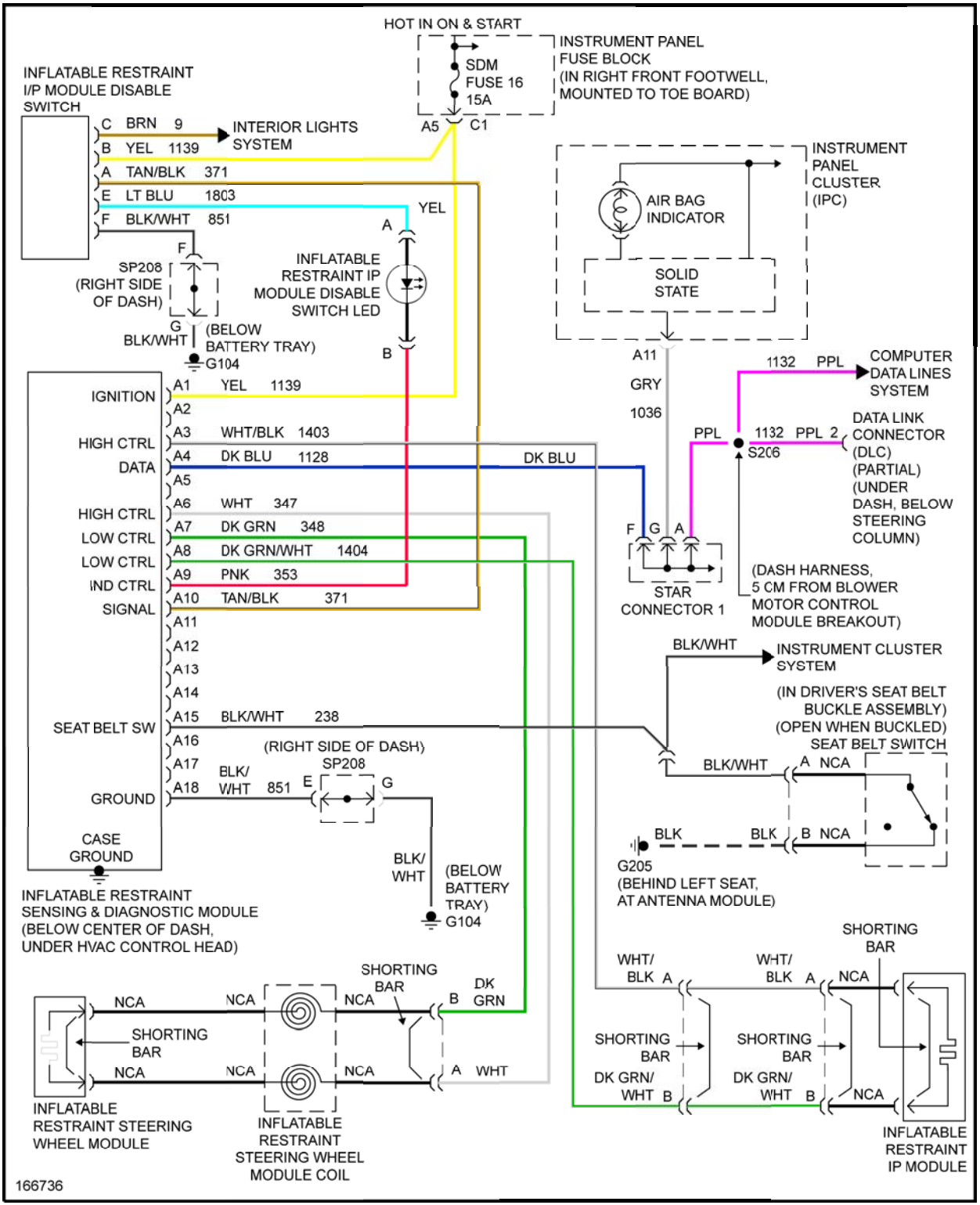
HOT IN ON & START
SDM
FUSE 16
15A
INSTRUMENT PANEL
FUSE BLOCK
(IN RIGHT FRONT FOOTWELL,
MOUNTED TO TOE BOARD)
A5
C1
INFLATABLE RESTRAINT
I/P MODULE DISABLE
SWITCH
C BRN 9
INTERIOR LIGHTS
SYSTEM
B YEL 1139
A TAN/BLK 371
E LT BLU 1803
F BLK/WHT 851
YEL
A
F
SP208
(RIGHT SIDE
OF DASH)
INFLATABLE
RESTRAINT IP
MODULE DISABLE
SWITCH LED
G
BLK/WHT
(BELOW
BATTERY TRAY)
G104
B
INSTRUMENT
PANEL
CLUSTER
(IPC)
AIR BAG
INDICATOR
SOLID
STATE
A11
GRY
1036
1132 PPL
COMPUTER
DATA LINES
SYSTEM
PPL
1132 PPL 2
S206
DATA LINK
CONNECTOR
(DLC)
(PARTIAL)
(UNDER
DASH, BELOW
STEERING
COLUMN)
IGNITION
A1 YEL 1139
A2
HIGH CTRL
A3 WHT/BLK 1403
DATA
A4 DK BLU 1128
DK BLU
A5
HIGH CTRL
A6 WHT 347
LOW CTRL
A7 DK GRN 348
LOW CTRL
A8 DK GRN/WHT 1404
IND CTRL
A9 PNK 353
SIGNAL
A10 TAN/BLK 371
A11
A12
A13
A14
SEAT BELT SW
A15 BLK/WHT 238
A16
A17
GROUND
A18
BLK/
WHT 851
(RIGHT SIDE OF DASH)
SP208
E
G
CASE
GROUND
BLK/
WHT
(BELOW
BATTERY
TRAY)
G104
INFLATABLE RESTRAINT
SENSING & DIAGNOSTIC MODULE
(BELOW CENTER OF DASH,
UNDER HVAC CONTROL HEAD)
F G A
STAR
CONNECTOR 1
(DASH HARNESS,
5 CM FROM BLOWER
MOTOR CONTROL
MODULE BREAKOUT)
BLK/WHT
INSTRUMENT CLUSTER
SYSTEM
(IN DRIVER'S SEAT BELT
BUCKLE ASSEMBLY)
(OPEN WHEN BUCKLED)
SEAT BELT SWITCH
BLK/WHT
A NCA
BLK
BLK
B NCA
G205
(BEHIND LEFT SEAT,
AT ANTENNA MODULE)
SHORTING
BAR
NCA
NCA
NCA
B
DK
GRN
SHORTING
BAR
NCA
NCA
NCA
A
WHT
INFLATABLE
RESTRAINT STEERING
WHEEL MODULE
INFLATABLE
RESTRAINT
STEERING WHEEL
MODULE COIL
WHT/
BLK A
WHT/
BLK A
NCA
SHORTING
BAR
SHORTING
BAR
SHORTING
BAR
DK GRN/
WHT B
DK GRN/
WHT B
NCA
INFLATABLE
RESTRAINT
IP MODULE
166736

Fig. 49: Supplemental Restraints Circuit

TRANSMISSION

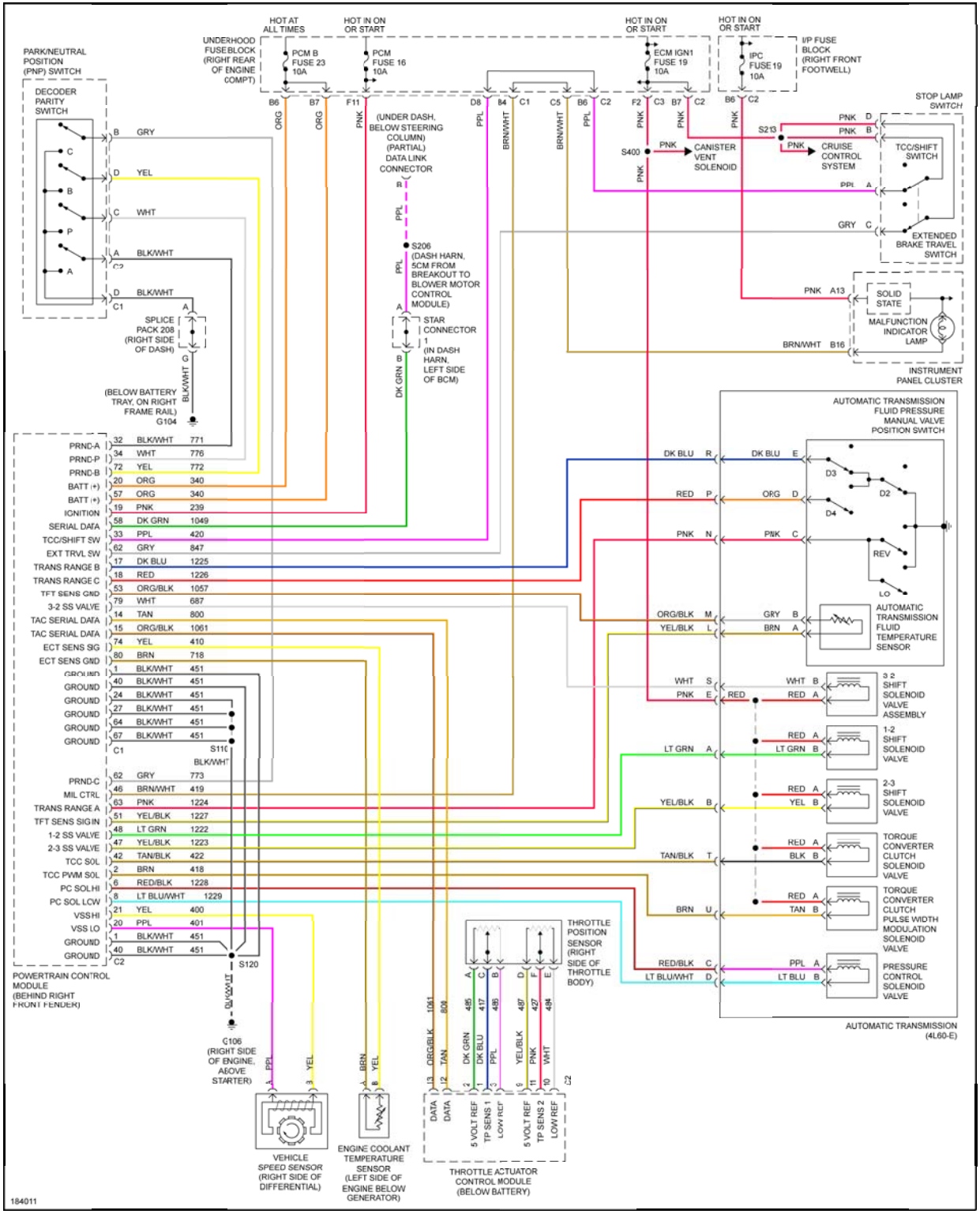
HOT AT ALL TIMES
HOT IN ON OR START
HOT IN ON OR START
HOT IN ON OR START
UNDERHOOD FUSE BLOCK (RIGHT REAR OF ENGINE COMPT)
PCM B FUSE 23 10A
PCM FUSE 16 10A
ECM IGN1 FUSE 19 10A
IPC FUSE 19 10A
I/P FUSE BLOCK (RIGHT FRONT FOOTWELL)
PARK/NEUTRAL POSITION (PNP) SWITCH
DECODER PARITY SWITCH
(UNDER DASH, BELOW STEERING COLUMN) (PARTIAL) DATA LINK CONNECTOR
S206 (DASH HARN, 5CM FROM BREAKOUT TO BLOWER MOTOR CONTROL MODULE)
STAR CONNECTOR 1 (IN DASH HARN, LEFT SIDE OF BCM)
SPLICE PACK 208 (RIGHT SIDE OF DASH)
(BELOW BATTERY TRAY, ON RIGHT FRAME RAIL) G104
CANISTER VENT SOLENOID
CRUISE CONTROL SYSTEM
STOP LAMP SWITCH
TCC/SHIFT SWITCH
EXTENDED BRAKE TRAVEL SWITCH
SOLID STATE
MALFUNCTION INDICATOR LAMP
INSTRUMENT PANEL CLUSTER
AUTOMATIC TRANSMISSION FLUID PRESSURE MANUAL VALVE POSITION SWITCH
AUTOMATIC TRANSMISSION FLUID TEMPERATURE SENSOR
3-2 SHIFT SOLENOID VALVE ASSEMBLY
1-2 SHIFT SOLENOID VALVE
2-3 SHIFT SOLENOID VALVE
TORQUE CONVERTER CLUTCH SOLENOID VALVE
TORQUE CONVERTER CLUTCH PULSE WIDTH MODULATION SOLENOID VALVE
PRESSURE CONTROL SOLENOID VALVE
AUTOMATIC TRANSMISSION (4L60-E)
PRND-A
PRND-P
PRND-B
BATT (+)
IGNITION
SERIAL DATA
TCC/SHIFT SW
EXT TRVL SW
TRANS RANGE B
TRANS RANGE C
TFT SENS GND
3-2 SS VALVE
TAC SERIAL DATA
ECT SENS SIG
ECT SENS GND
GROUND
PRND-C
MIL CTRL
TRANS RANGE A
TFT SENS SIG IN
1-2 SS VALVE
2-3 SS VALVE
TCC SOL
TCC PWM SOL
PC SOL HI
PC SOL LOW
VSS HI
VSS LO
POWERTRAIN CONTROL MODULE (BEHIND RIGHT FRONT FENDER)
S120
G106 (RIGHT SIDE OF ENGINE, ABOVE STARTER)
VEHICLE SPEED SENSOR (RIGHT SIDE OF DIFFERENTIAL)
ENGINE COOLANT TEMPERATURE SENSOR (LEFT SIDE OF ENGINE BELOW GENERATOR)
THROTTLE POSITION SENSOR (RIGHT SIDE OF THROTTLE BODY)
THROTTLE ACTUATOR CONTROL MODULE (BELOW BATTERY)
DATA
5 VOLT REF
TP SENS 1
LOW REF
5 VOLT REF
TP SENS 2
LOW REF
184011

Fig. 50: A/T Circuit

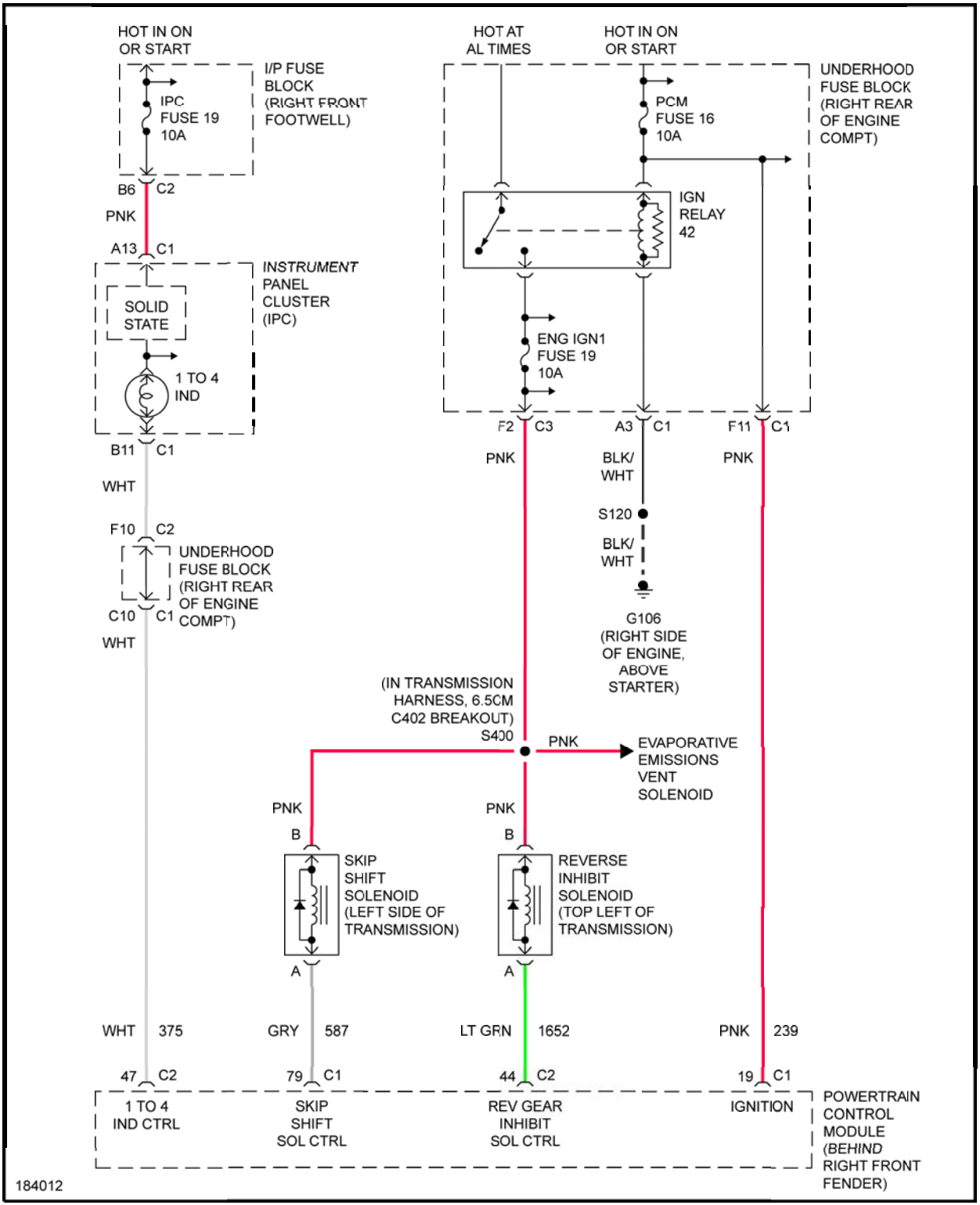
HOT IN ON OR START
I/P FUSE BLOCK (RIGHT FRONT FOOTWELL)
IPC FUSE 19 10A
B6
C2
PNK
A13
C1
INSTRUMENT PANEL CLUSTER (IPC)
SOLID STATE
1 TO 4 IND
B11
C1
WHT
F10
C2
UNDERHOOD FUSE BLOCK (RIGHT REAR OF ENGINE COMPT)
C10
C1
WHT
HOT AT AL TIMES
HOT IN ON OR START
UNDERHOOD FUSE BLOCK (RIGHT REAR OF ENGINE COMPT)
PCM FUSE 16 10A
IGN RELAY 42
ENG IGN1 FUSE 19 10A
F2
C3
A3
C1
F11
C1
PNK
BLK/ WHT
PNK
S120
BLK/ WHT
G106 (RIGHT SIDE OF ENGINE, ABOVE STARTER)
(IN TRANSMISSION HARNESS, 6.5CM C402 BREAKOUT)
S400
PNK
EVAPORATIVE EMISSIONS VENT SOLENOID
PNK
B
SKIP SHIFT SOLENOID (LEFT SIDE OF TRANSMISSION)
A
PNK
B
REVERSE INHIBIT SOLENOID (TOP LEFT OF TRANSMISSION)
A
WHT 375
GRY 587
LT GRN 1652
PNK 239
47
C2
79
C1
44
C2
19
C1
1 TO 4 IND CTRL
SKIP SHIFT SOL CTRL
REV GEAR INHIBIT SOL CTRL
IGNITION
POWERTRAIN CONTROL MODULE (BEHIND RIGHT FRONT FENDER)
184012

Fig. 51: M/T Circuit

TRUNK, TAILGATE, FUEL DOOR

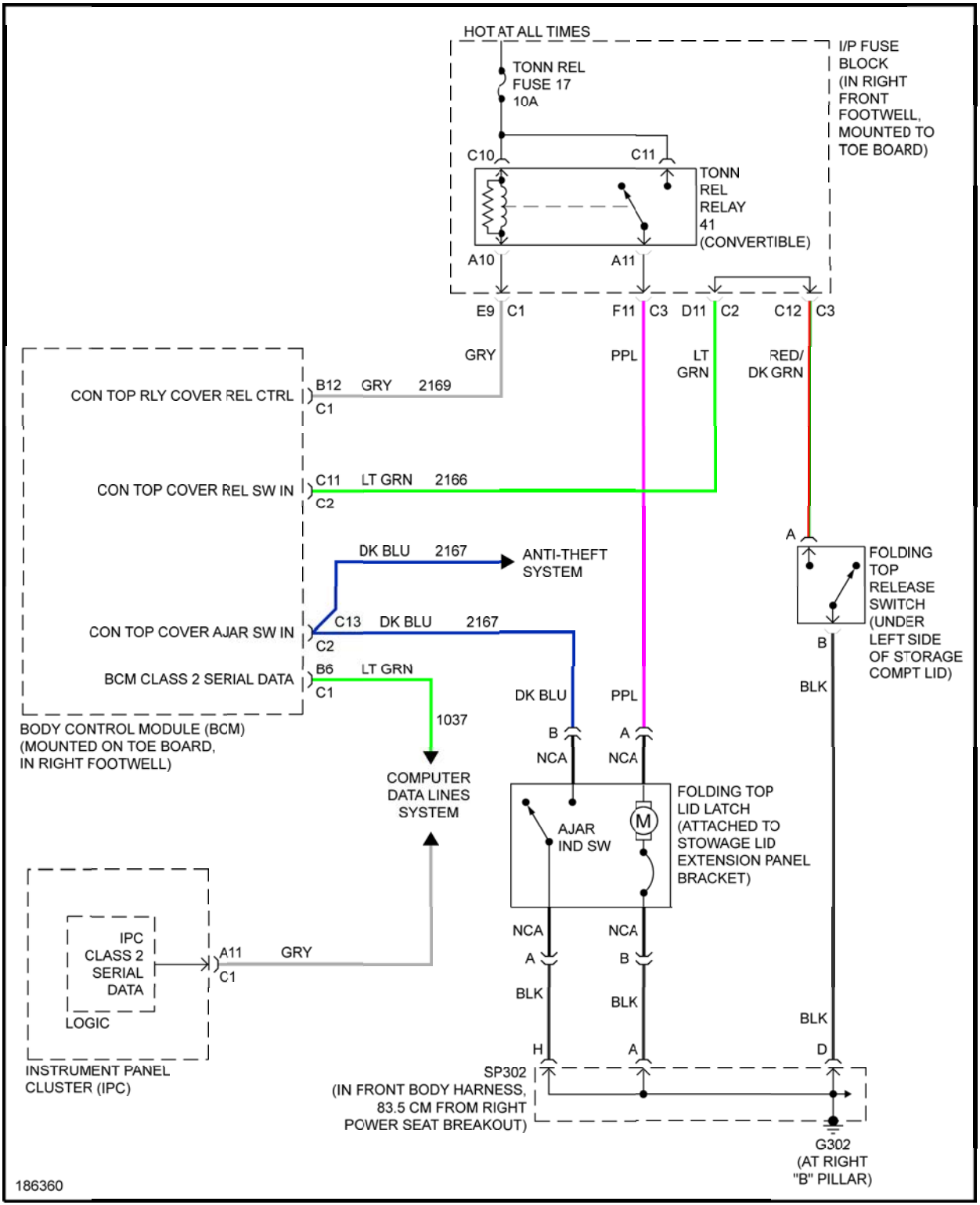
HOT AT ALL TIMES
TONN REL FUSE 17 10A
I/P FUSE BLOCK (IN RIGHT FRONT FOOTWELL, MOUNTED TO TOE BOARD)
C10
C11
TONN REL RELAY 41 (CONVERTIBLE)
A10
A11
E9 C1
F11 C3
D11 C2
C12 C3
GRY
PPL
LT GRN
RED/ DK GRN
CON TOP RLY COVER REL CTRL
B12 GRY 2169
C1
CON TOP COVER REL SW IN
C11 LT GRN 2166
C2
DK BLU 2167
ANTI-THEFT SYSTEM
CON TOP COVER AJAR SW IN
C13 DK BLU 2167
C2
BCM CLASS 2 SERIAL DATA
B6 LT GRN
C1
BODY CONTROL MODULE (BCM) (MOUNTED ON TOE BOARD, IN RIGHT FOOTWELL)
1037
COMPUTER DATA LINES SYSTEM
A
FOLDING TOP RELEASE SWITCH (UNDER LEFT SIDE OF STORAGE COMPT LID)
B
BLK
DK BLU
PPL
B
A
NCA
NCA
AJAR IND SW
M
FOLDING TOP LID LATCH (ATTACHED TO STOWAGE LID EXTENSION PANEL BRACKET)
IPC CLASS 2 SERIAL DATA
LOGIC
A11 GRY
C1
INSTRUMENT PANEL CLUSTER (IPC)
NCA
NCA
A
B
BLK
BLK
BLK
H
A
D
SP302 (IN FRONT BODY HARNESS, 83.5 CM FROM RIGHT POWER SEAT BREAKOUT)
G302 (AT RIGHT "B" PILLAR)
186360

Fig. 52: Folding Top Lid Release Circuit

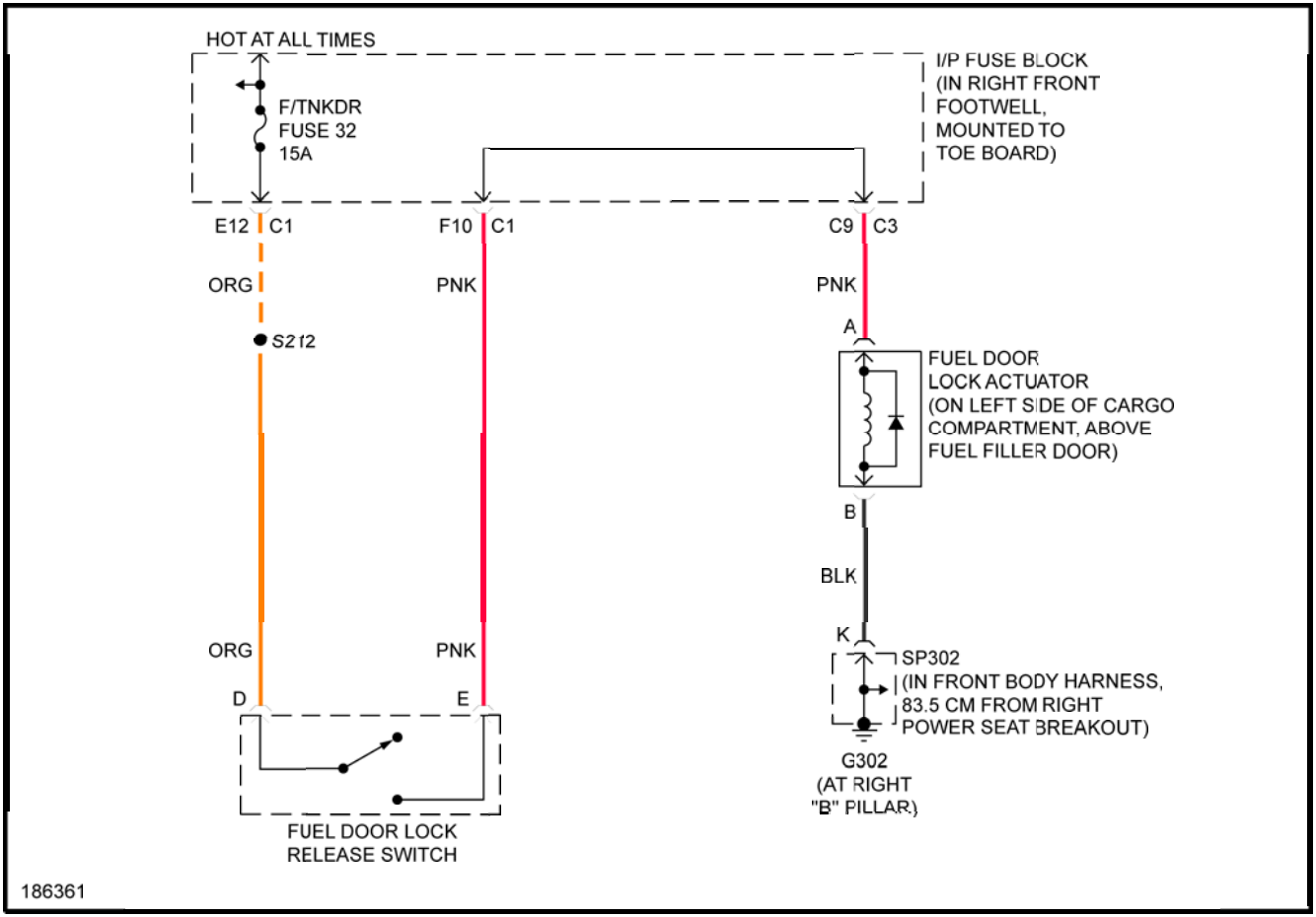
HOT AT ALL TIMES
F/TNKDR
FUSE 32
15A
I/P FUSE BLOCK
(IN RIGHT FRONT
FOOTWELL,
MOUNTED TO
TOE BOARD)
E12
C1
F10
C1
C9
C3
ORG
PNK
PNK
S212
A
FUEL DOOR
LOCK ACTUATOR
(ON LEFT SIDE OF CARGO
COMPARTMENT, ABOVE
FUEL FILLER DOOR)
B
BLK
K
ORG
PNK
SP302
(IN FRONT BODY HARNESS,
83.5 CM FROM RIGHT
POWER SEAT BREAKOUT)
D
E
G302
(AT RIGHT
"B" PILLAR)
FUEL DOOR LOCK
RELEASE SWITCH
186361

Fig. 53: Fuel Door Release Circuit

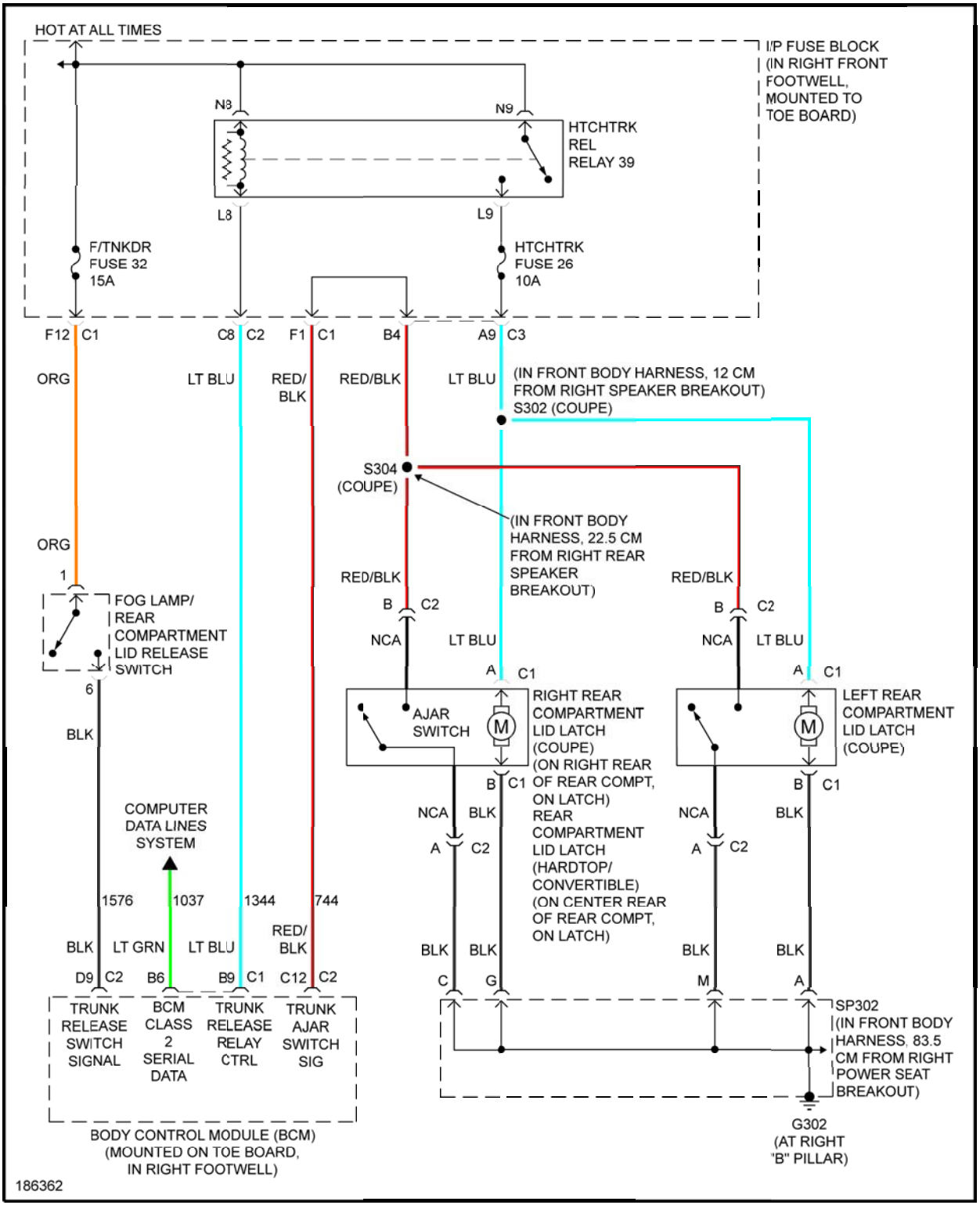
HOT AT ALL TIMES
I/P FUSE BLOCK (IN RIGHT FRONT FOOTWELL, MOUNTED TO TOE BOARD)
N8
N9
HTCHTRK REL RELAY 39
L8
L9
F/TNKDR FUSE 32 15A
HTCHTRK FUSE 26 10A
F12 C1
C8 C2
F1 C1
B4
A9 C3
ORG
LT BLU
RED/BLK
RED/BLK
LT BLU
(IN FRONT BODY HARNESS, 12 CM FROM RIGHT SPEAKER BREAKOUT) S302 (COUPE)
S304 (COUPE)
(IN FRONT BODY HARNESS, 22.5 CM FROM RIGHT REAR SPEAKER BREAKOUT)
ORG
1
FOG LAMP/ REAR COMPARTMENT LID RELEASE SWITCH
6
BLK
RED/BLK
B C2
NCA
LT BLU
A C1
AJAR SWITCH
M
RIGHT REAR COMPARTMENT LID LATCH (COUPE)
(ON RIGHT REAR OF REAR COMPT, ON LATCH)
REAR COMPARTMENT LID LATCH (HARDTOP/ CONVERTIBLE)
(ON CENTER REAR OF REAR COMPT, ON LATCH)
LEFT REAR COMPARTMENT LID LATCH (COUPE)
B C1
NCA BLK
A C2
BLK BLK
C G
BLK BLK
M A
COMPUTER DATA LINES SYSTEM
1576
1037
1344
744
BLK
LT GRN
LT BLU
RED/BLK
D9 C2
B6
B9 C1
C12 C2
TRUNK RELEASE SWITCH SIGNAL
BCM CLASS 2 SERIAL DATA
TRUNK RELEASE RELAY CTRL
TRUNK AJAR SWITCH SIG
BODY CONTROL MODULE (BCM) (MOUNTED ON TOE BOARD, IN RIGHT FOOTWELL)
SP302 (IN FRONT BODY HARNESS, 83.5 CM FROM RIGHT POWER SEAT BREAKOUT)
G302 (AT RIGHT "B" PILLAR)
186362

Fig. 54: Hatch Release Circuit

WARNING SYSTEMS

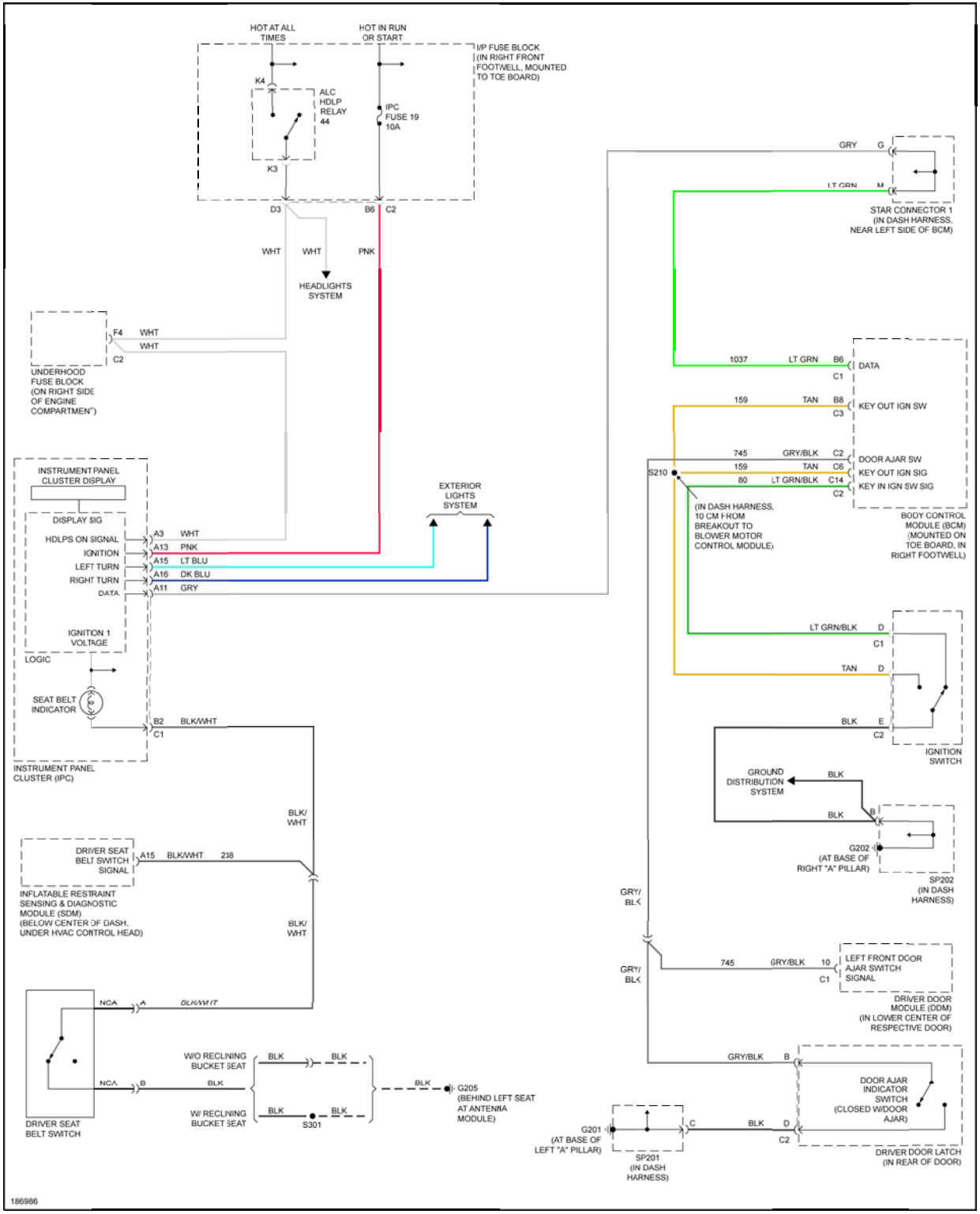
HOT AT ALL TIMES
HOT IN RUN OR START
I/P FUSE BLOCK (IN RIGHT FRONT FOOTWELL, MOUNTED TO TOE BOARD)
K4
ALC HDLP RELAY 44
K3
IPC FUSE 19 10A
D3
B6
C2
WHT
WHT
PNK
HEADLIGHTS SYSTEM
F4
WHT
WHT
C2
UNDERHOOD FUSE BLOCK (ON RIGHT SIDE OF ENGINE COMPARTMENT)
INSTRUMENT PANEL CLUSTER DISPLAY
DISPLAY SIG
HDLPS ON SIGNAL
IGNITION
LEFT TURN
RIGHT TURN
DATA
A3 WHT
A13 PNK
A15 LT BLU
A16 DK BLU
A11 GRY
IGNITION 1 VOLTAGE
LOGIC
SEAT BELT INDICATOR
B2 BLK/WHT
C1
INSTRUMENT PANEL CLUSTER (IPC)
EXTERIOR LIGHTS SYSTEM
BLK/WHT
DRIVER SEAT BELT SWITCH SIGNAL
A15 BLK/WHT 238
INFLATABLE RESTRAINT SENSING & DIAGNOSTIC MODULE (SDM) (BELOW CENTER OF DASH, UNDER HVAC CONTROL HEAD)
BLK/WHT
NCA A BLK/WHT
NCA B BLK
DRIVER SEAT BELT SWITCH
W/O RECLINING BUCKET SEAT
BLK BLK
W/ RECLINING BUCKET SEAT
BLK BLK
S301
BLK
G205 (BEHIND LEFT SEAT AT ANTENNA MODULE)
GRY G
LT GRN M
STAR CONNECTOR 1 (IN DASH HARNESS, NEAR LEFT SIDE OF BCM)
1037 LT GRN B6 C1 DATA
159 TAN B8 C3 KEY OUT IGN SW
745 GRY/BLK C2 DOOR AJAR SW
159 TAN C6 KEY OUT IGN SIG
80 LT GRN/BLK C14 KEY IN IGN SW SIG
C2
S210
(IN DASH HARNESS, 10 CM FROM BREAKOUT TO BLOWER MOTOR CONTROL MODULE)
BODY CONTROL MODULE (BCM) (MOUNTED ON TOE BOARD, IN RIGHT FOOTWELL)
LT GRN/BLK D C1
TAN D
BLK E C2
IGNITION SWITCH
GROUND DISTRIBUTION SYSTEM
BLK
BLK B
G202 (AT BASE OF RIGHT "A" PILLAR)
SP202 (IN DASH HARNESS)
GRY/BLK
745 GRY/BLK 10 C1 LEFT FRONT DOOR AJAR SWITCH SIGNAL
DRIVER DOOR MODULE (DDM) (IN LOWER CENTER OF RESPECTIVE DOOR)
GRY/BLK B
DOOR AJAR INDICATOR SWITCH (CLOSED W/DOOR AJAR)
G201 (AT BASE OF LEFT "A" PILLAR)
C BLK D C2
SP201 (IN DASH HARNESS)
DRIVER DOOR LATCH (IN REAR OF DOOR)
186986

Fig. 55: Warning Systems Circuit

WIPER/WASHER

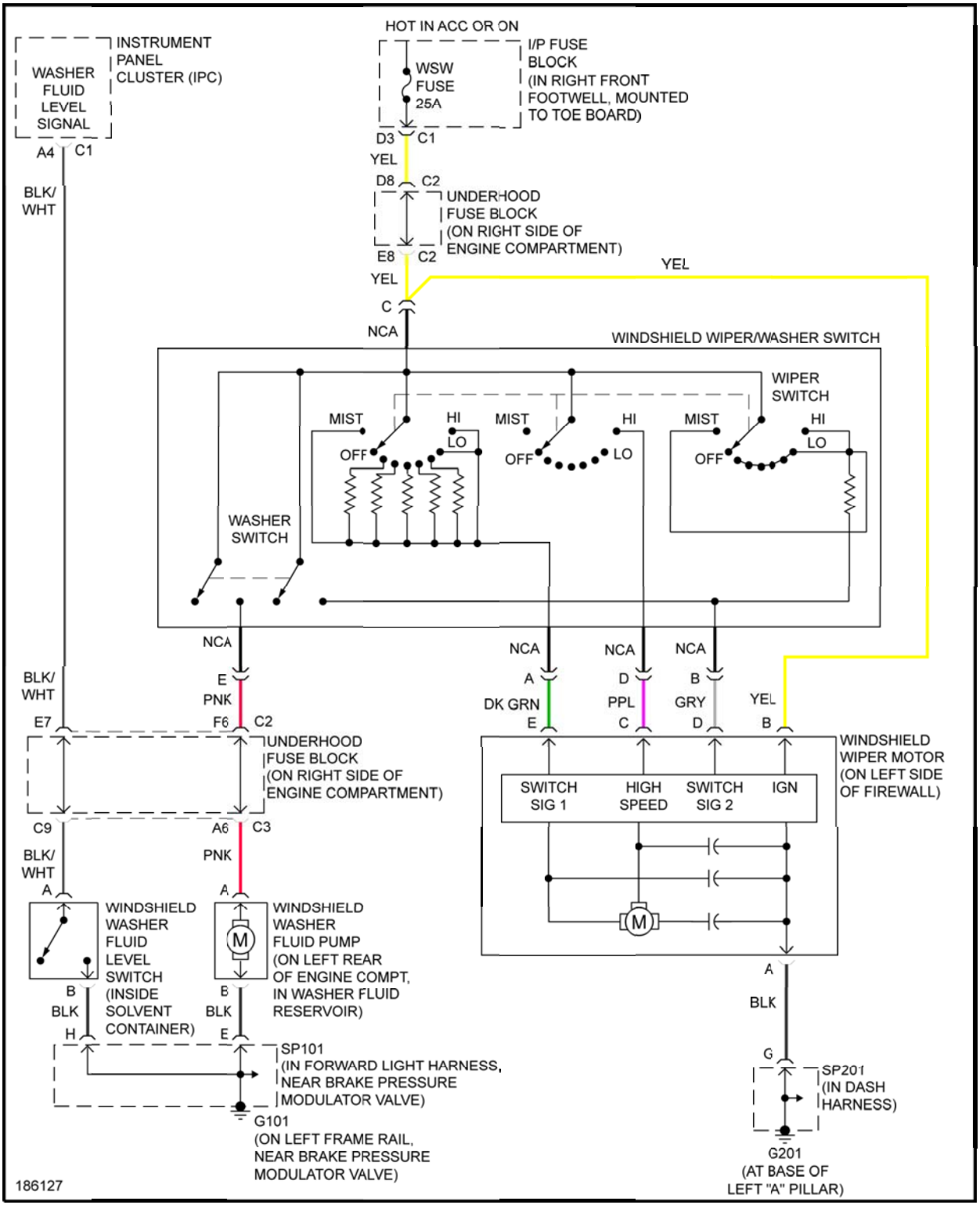
HOT IN ACC OR ON
INSTRUMENT PANEL CLUSTER (IPC)
WASHER FLUID LEVEL SIGNAL
A4
C1
BLK/WHT
I/P FUSE BLOCK (IN RIGHT FRONT FOOTWELL, MOUNTED TO TOE BOARD)
WSW FUSE 25A
D3
C1
YEL
D8
C2
UNDERHOOD FUSE BLOCK (ON RIGHT SIDE OF ENGINE COMPARTMENT)
E8
C2
YEL
YEL
C
NCA
WINDSHIELD WIPER/WASHER SWITCH
WIPER SWITCH
MIST
HI
LO
OFF
WASHER SWITCH
NCA
E
PNK
F6
C2
NCA
A
DK GRN
E
NCA
D
PPL
C
NCA
B
GRY
D
YEL
B
BLK/WHT
E7
UNDERHOOD FUSE BLOCK (ON RIGHT SIDE OF ENGINE COMPARTMENT)
C9
A6
C3
BLK/WHT
PNK
WINDSHIELD WIPER MOTOR (ON LEFT SIDE OF FIREWALL)
SWITCH SIG 1
HIGH SPEED
SWITCH SIG 2
IGN
M
A
WINDSHIELD WASHER FLUID LEVEL SWITCH (INSIDE SOLVENT CONTAINER)
WINDSHIELD WASHER FLUID PUMP (ON LEFT REAR OF ENGINE COMPT, IN WASHER FLUID RESERVOIR)
B
BLK
H
E
SP101 (IN FORWARD LIGHT HARNESS, NEAR BRAKE PRESSURE MODULATOR VALVE)
G101 (ON LEFT FRAME RAIL, NEAR BRAKE PRESSURE MODULATOR VALVE)
BLK
G
SP201 (IN DASH HARNESS)
G201 (AT BASE OF LEFT "A" PILLAR)
186127

Fig. 56: Wiper/Washer Circuit